「Chapter 2 4DOF Robot Arm」

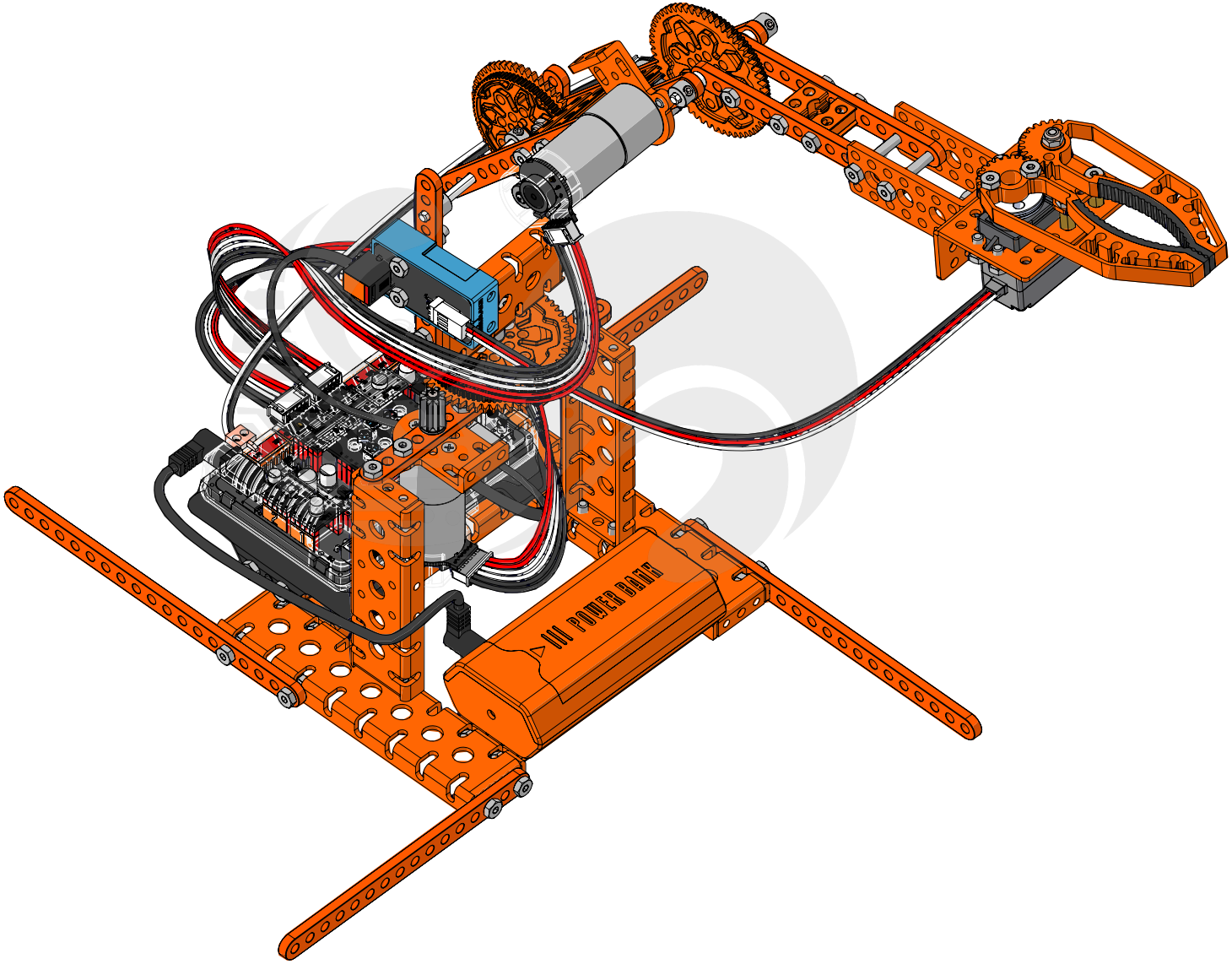

「4DOF Robot Arm」

▶ 00：Assembly Guide of Mainboard ELF

- 1x328P MicroChip Module V1.0
- 1xWeeeMake Bluetooth 4.1 Module
- 1xLight Sensor (Pin)
- 1xIR Receiver (Pin)
- 1xSound Sensor (Pin)
- 1xELF Mainboard
- 1xELF Mainboard Lid
- 1xELF Mainbaord Base
- 1xRGB LED - 8 (Pin)
- 2xDC/Encoder Motor Driver

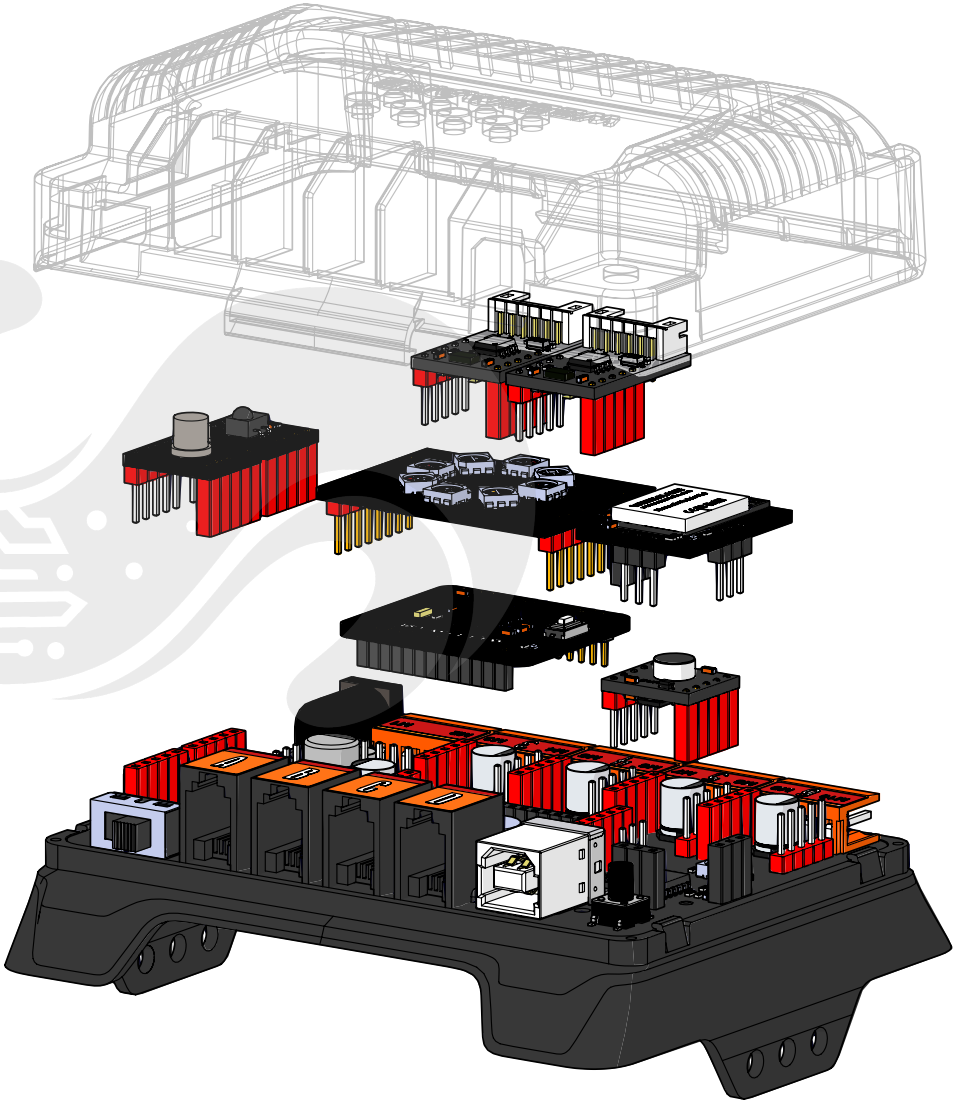

▶ 00：Assembly Guide of Mainboard ELF

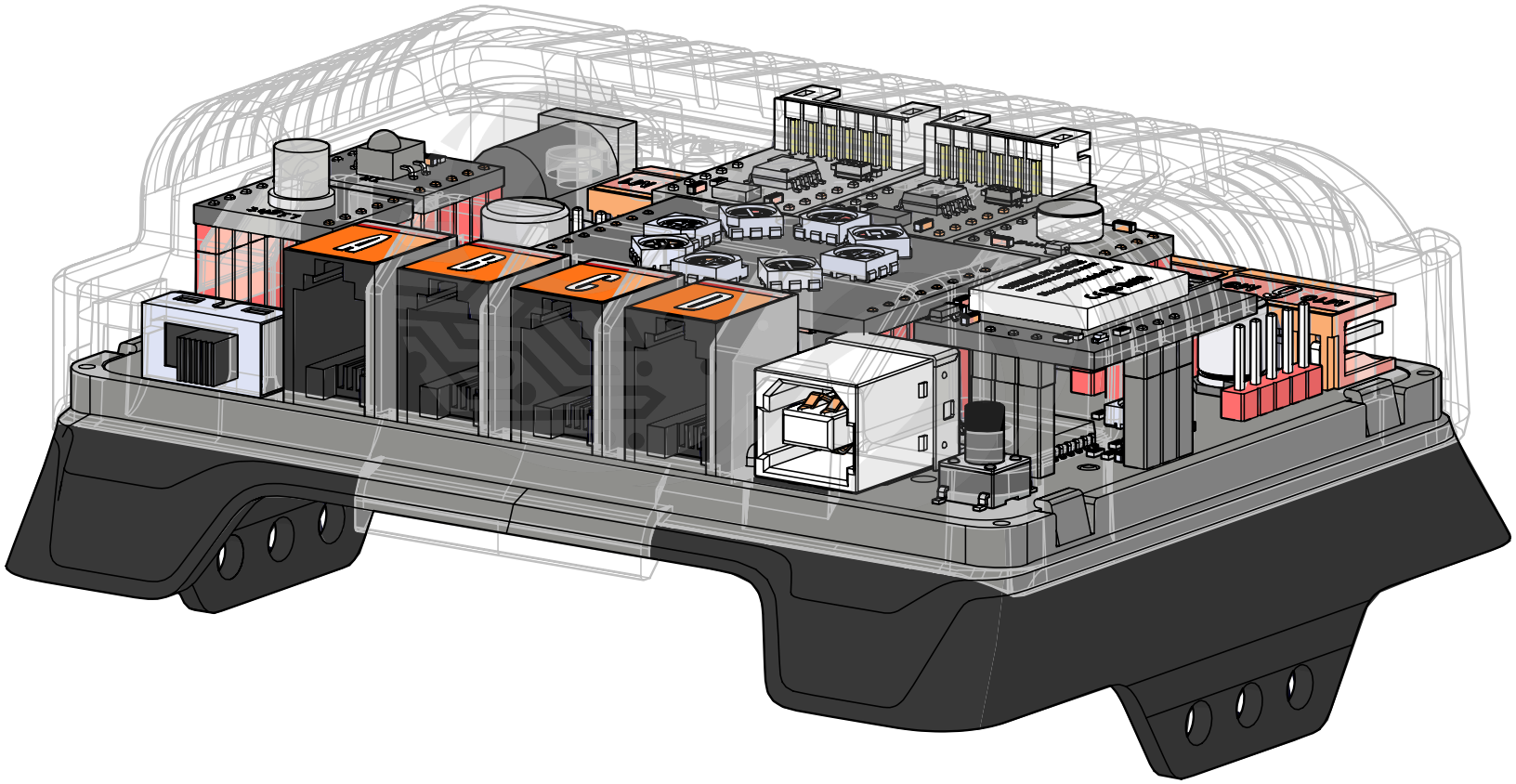

「4DOF Robot Arm」

▶ 00：Assembly Guide of Mainboard ELF

- 4xScrew M4*8
- 2xLinkage 0208-24
- 1xBeam 1030-100-B
- 1xMainboard ELF

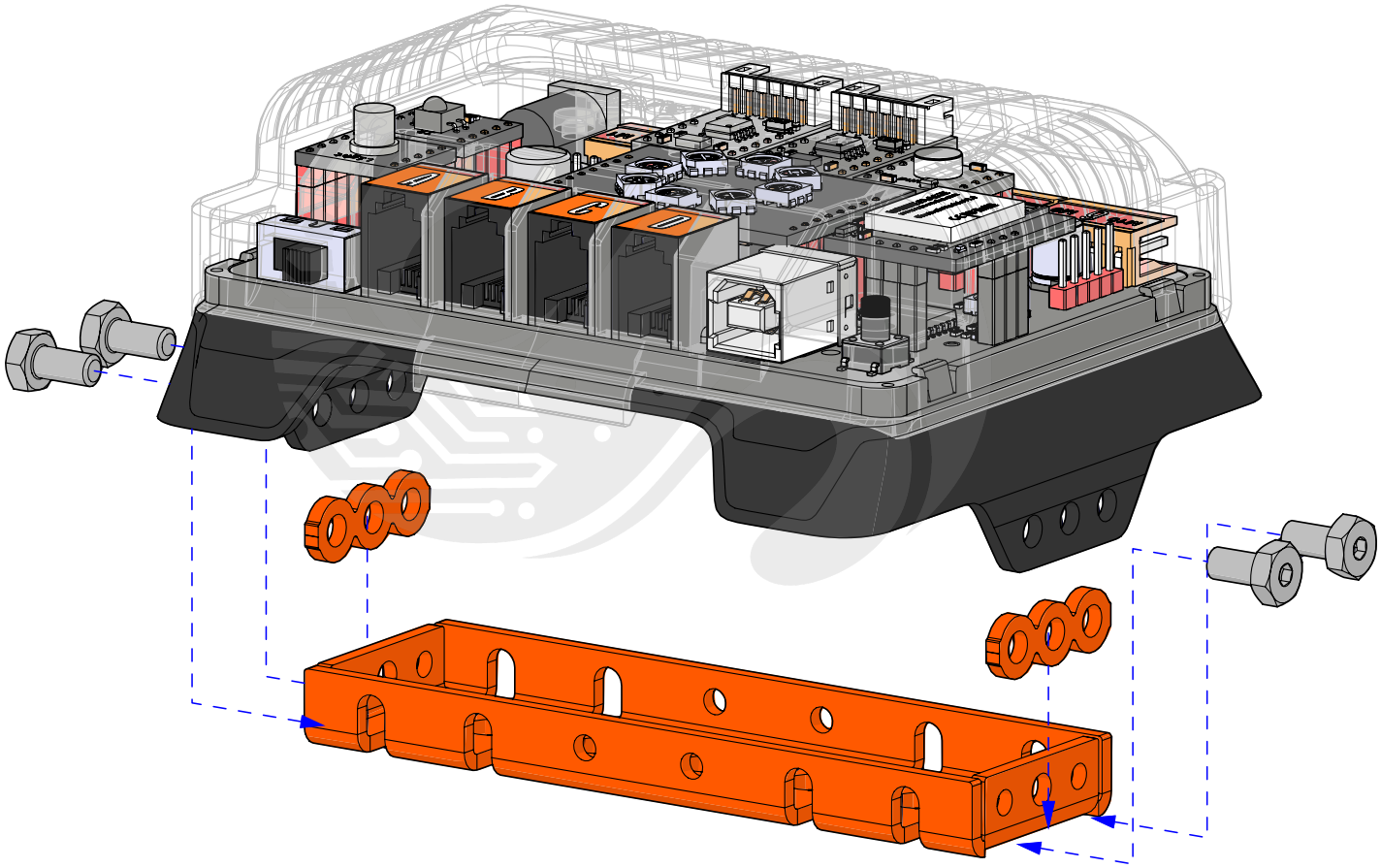

▶ 00：Assembly Guide of Mainboard ELF

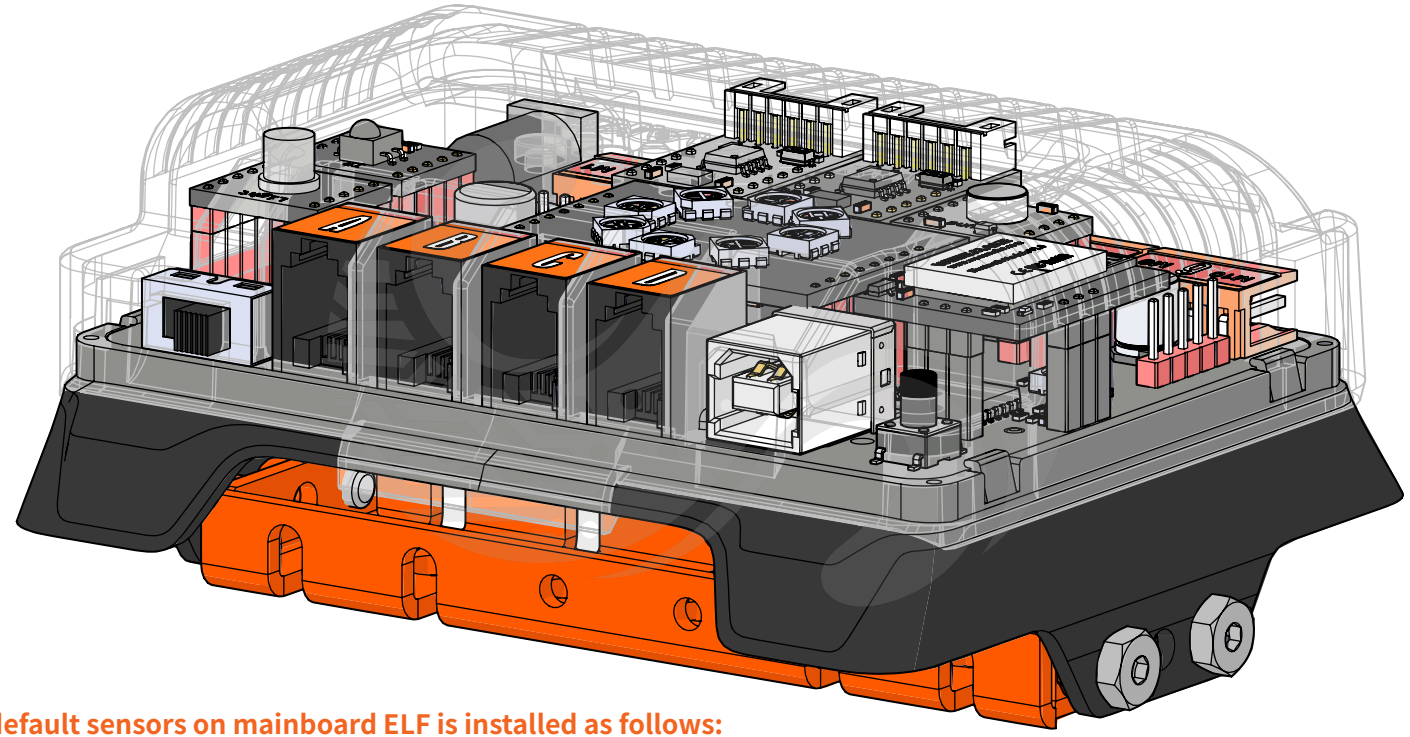

Tips:

The default sensors on mainboard ELF is installed as follows:

Port 1 - Light Sensor Port 2 - IR Receiver Port 3 & 4 - DC/Encoder Motor Driver Port 5 - Sound Sensor

MCU Port - 328P Micro Chip

Communication Port - Bluetooth Module

Special port - RGB LED -8 Module

「4DOF Robot Arm」

▶ 01：Pre-plug Nut M4 into the Rail of the Slide Beam 0824-96

- 1xSlide Beam 0824-96
- 2xNut M4

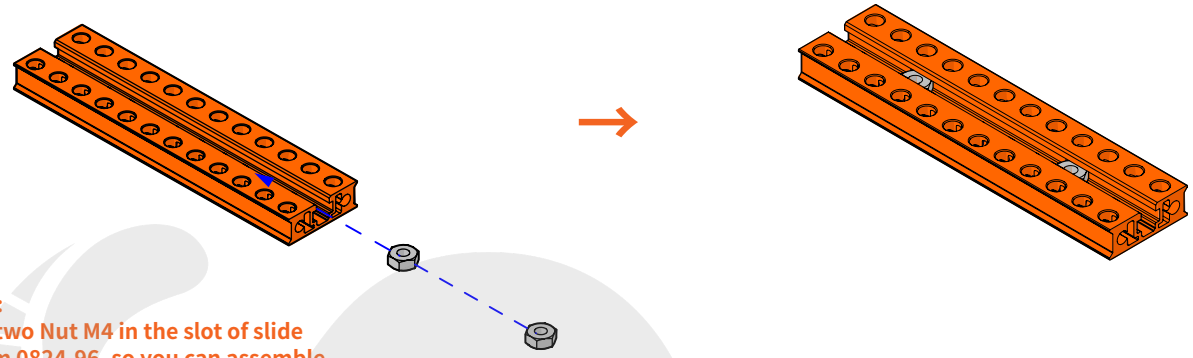

Tips:
Put two Nut M4 in the slot of slide beam 0824-96, so you can assemble battery holder later. If missed this step, battery holder cannot be fixed.

▶ 02：Assemble the Base Structure

- 1xBeam 1030-100
- 2xBeam 1030-132
- 1xSlide Beam 0824-96 (Nut M4 in slot)
- 2xLinkage 0208-24
- 8xScrew M4*8

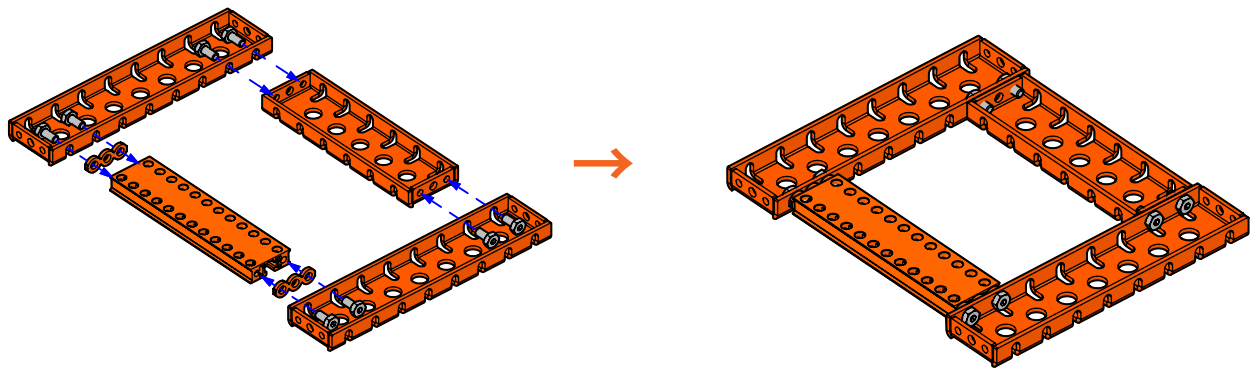

Tips:

Please pay attention to the hole position and direction.

▶ 02：Assemble the Base Structure

- 2xBeam 0410-154
- 4xScrew M4*10
- 4xNut M4

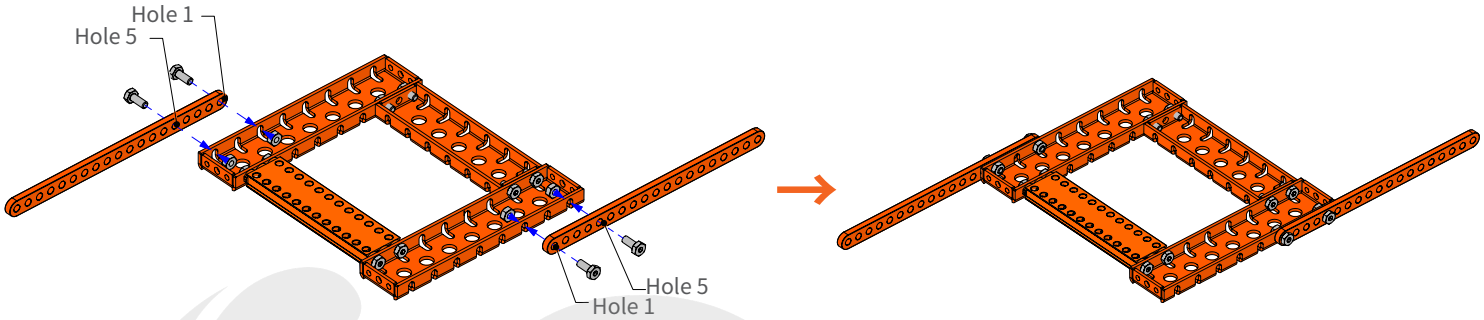

Tips:

Please pay attention to the hole position and direction.

▶ 02：Assemble the Base Structure

- 2xBeam 0410-130
- 4xScrew M4*8

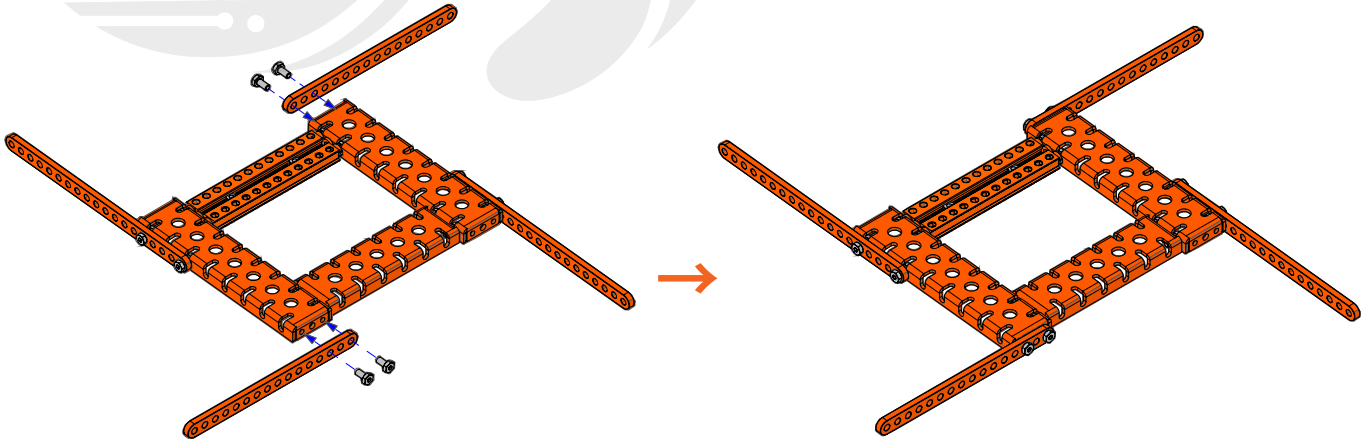

「4DOF Robot Arm」

▶ 03：Assemble the 18650 Lithium Battery Holder

- 2x18650 Lithium Battery
- 1xLithium Battery Holder Lid
- 1xLithium Battery Holder
- 2xScrew M4*8

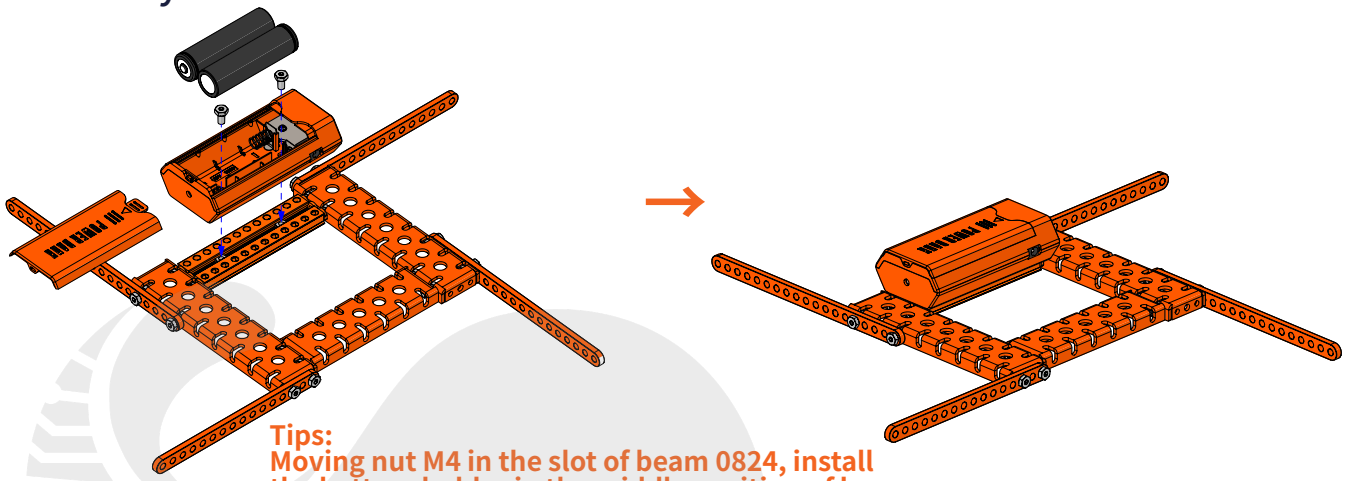

Tips:
Moving nut M4 in the slot of beam 0824, install the battery holder in the middle position of beam.

▶ 04：Assemble Vertical Fixed Beam

- 1xBeam 1030-100
- 1xBeam 1030-100-B
- 4xScrew M4*8

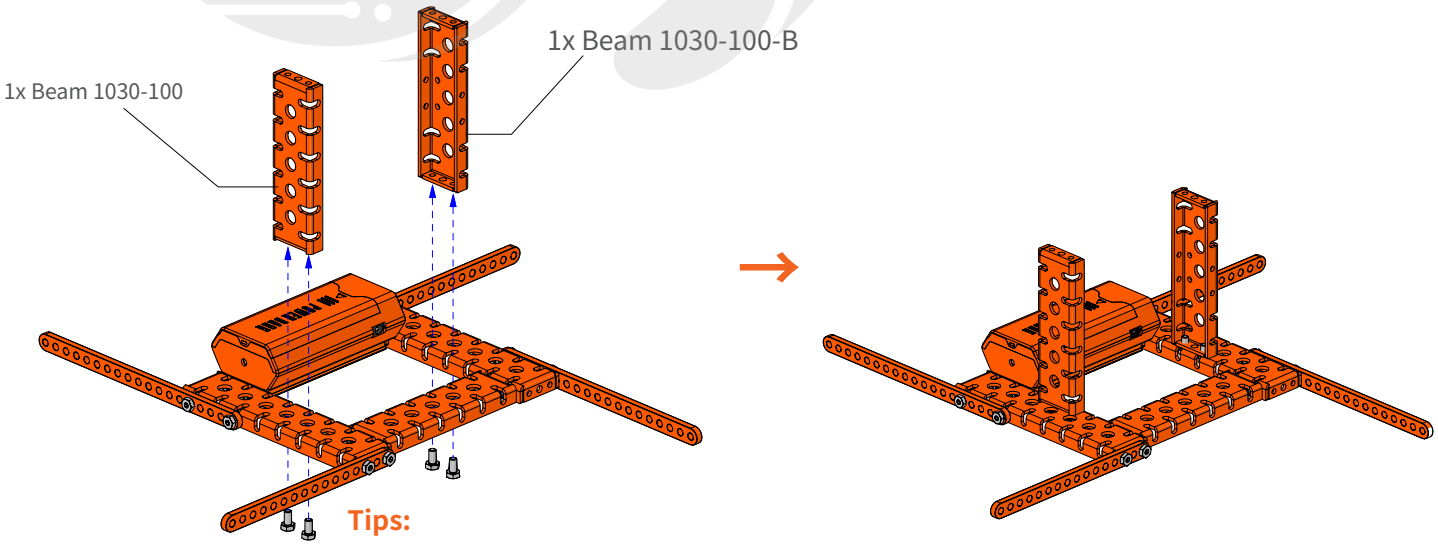

Tips:

Please pay attention to the hole position and direction.

「4DOF Robot Arm」

▶ 05：Assemble Horizontal Encoder DC Motor 25 (188RPM)

- 1x25 Motor Bracket
- 1xEncoder DC Motor-25 9V188RPM
- 2xCountersunk Head Screw M3*6

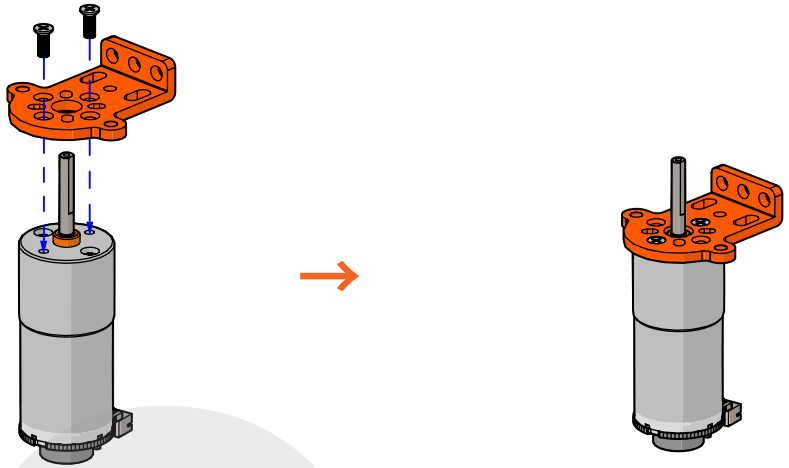

Tips:

Please pay attention to the hole position and direction.

▶ 06：Assemble 8T Plastic Gear

- 1xBeam 0410-130
- 1xEncoder DC Motor-25 9V188RPM Assembly
- 1x8T-Plastic Gear V1.0 (Flat Hole)
- 2xScrew M4*8
- 1xScrew M2*4

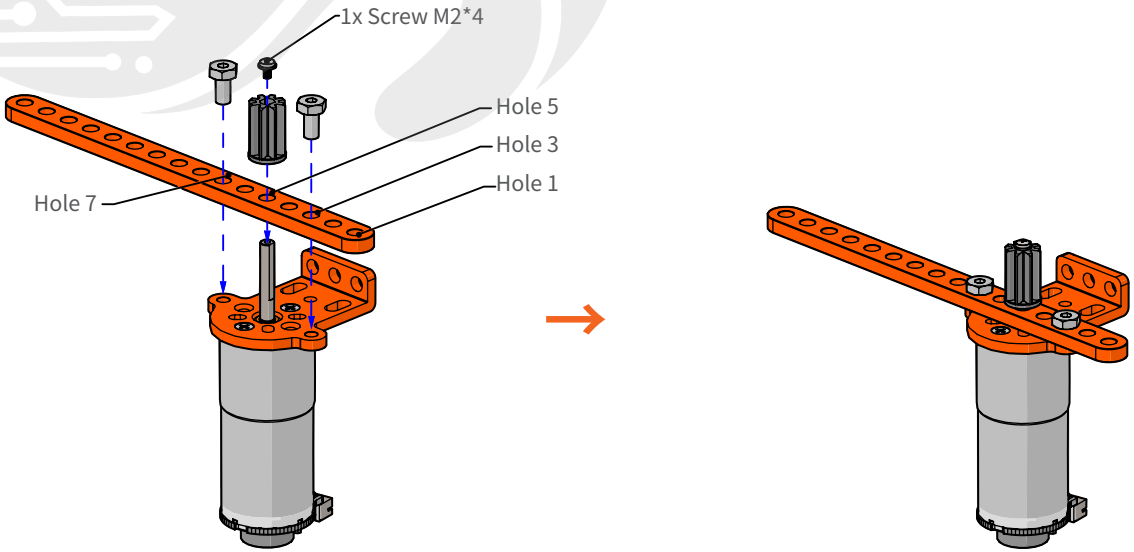

Tips:

Please pay attention to the hole position and direction.

「4DOF Robot Arm」

▶ 07：Assemble the 56T Plastic Gear

- 2x56T-Plastic Gear V1.0
- 1xDriving Flange Hub 4mm
- 1xThreaded shaft 4-48
- 1xShaft Collar - 4mm
- 1xFlange Copper Bearing 4*8*3.5
- 2xNylon Spacer 4*7*3
- 2xNut M4
- 1xHeadless Screw M4*3

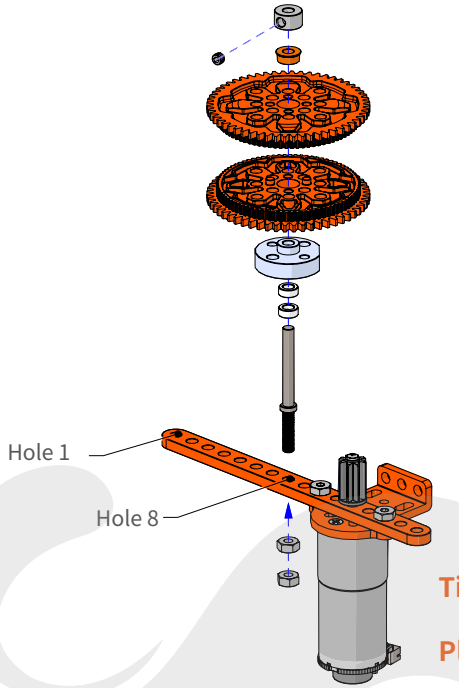

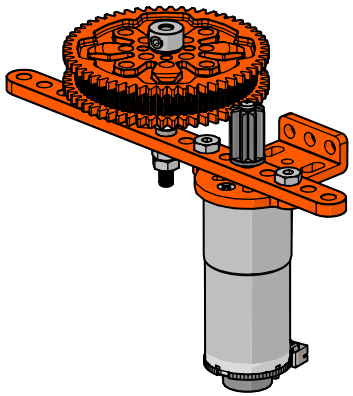

Tips:

Please pay attention to the hole position and direction.

▶ 08：Assemble Horizontal Rotary Shaft

- 1xHorizontal rotary shaft assembly
- 2xScrew M4*8

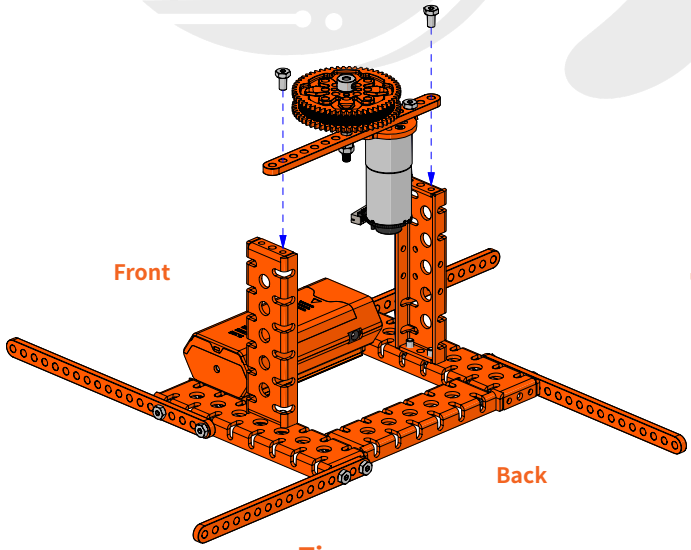

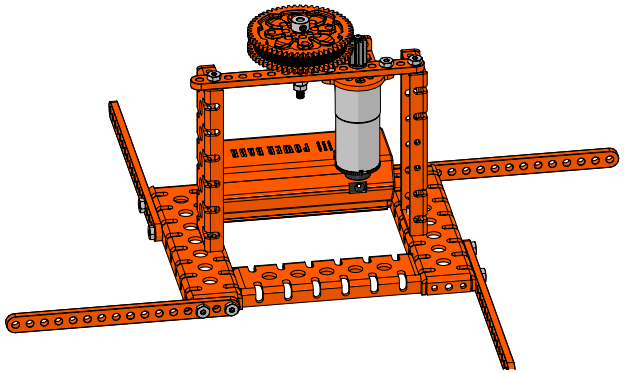

Tips:

Please pay attention to the hole position and direction.

▶ 09：Assemble DC Motor 25 (50RPM)

- 1x25 Motor Bracket
- 1xDC Motor-25 (50RPM)
- 2xCountersunk Head Screw M3*6

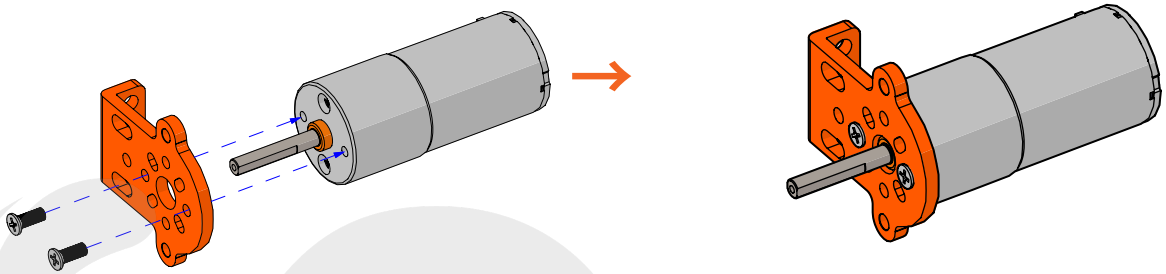

Tips:

Please pay attention to the hole position and direction.

▶ 09：Assemble DC Motor 25 (50RPM)

- 1xBeam 0410-106
- 1xDC Motor-25 (50RPM) Assembly
- 2xScrew M4*8

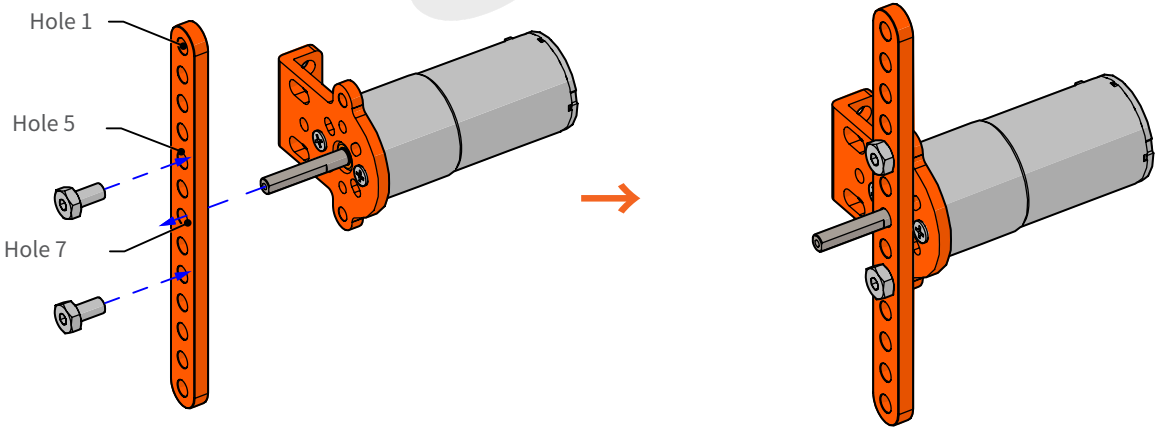

Tips:

Please pay attention to the hole position and direction.

「4DOF Robot Arm」

▶ 10：Assemble 8T Plastic Gear


1x8T-Plastic Gear V1.0 (Flat Hole)


1xScrew M2*4

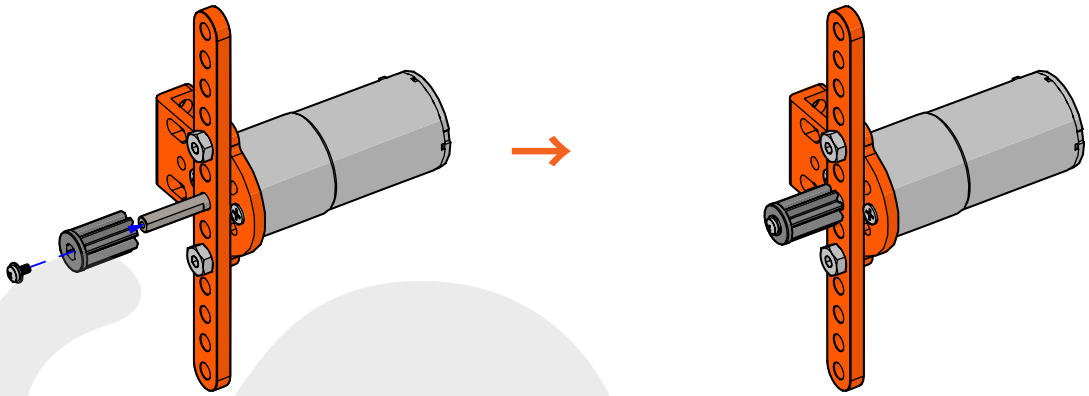

▶ 11：Assemble First Stage Free Arm


1xBeam 1030-68


1xBeam 0410-106


4xScrew M4*8

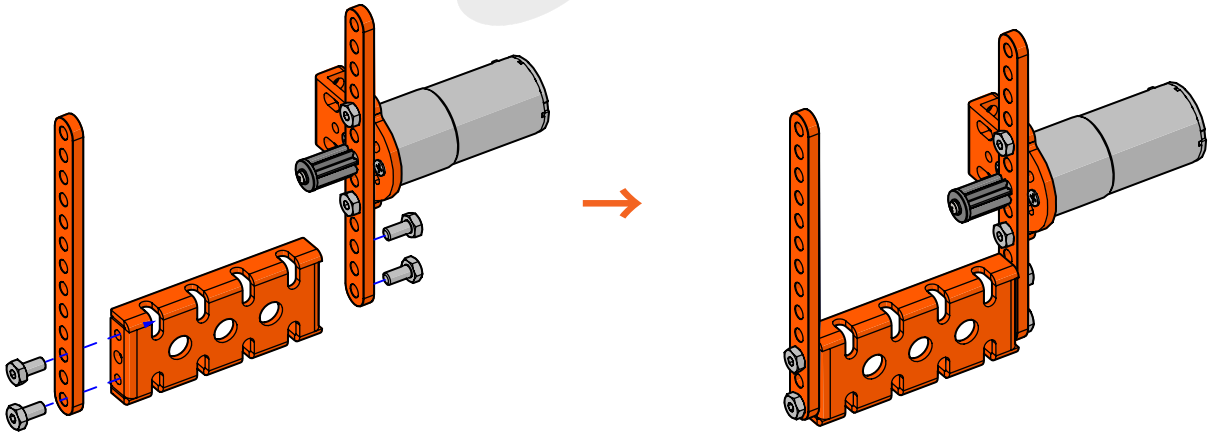

Tips:

Please pay attention to the hole position and direction.

▶ 12：Assemble First Stage Free Arm to the Base

- 1xFirst Stage Free Arm Assembly
- 2xAluminum Column 4*6*6
- 2xScrew M4*25

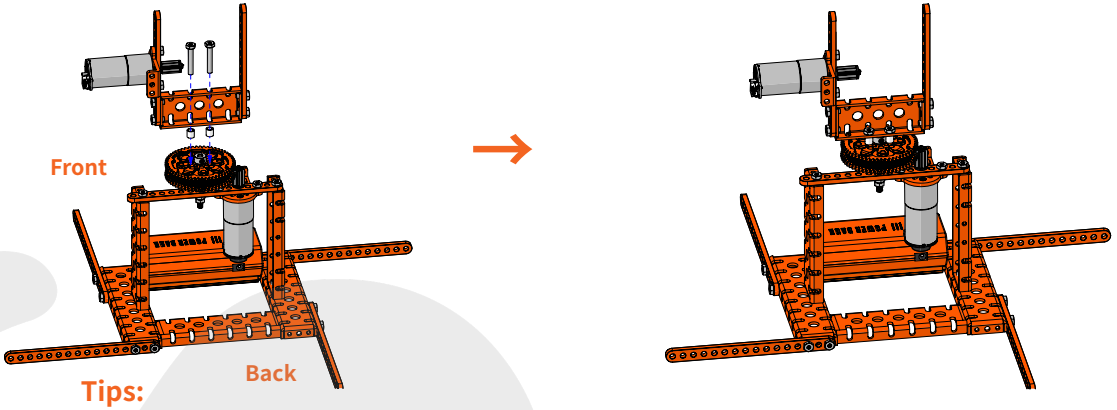

Tips:

Please pay attention to the hole position and direction.

▶ 13：Assemble Encoder DC Motor -25 (188RPM)

- 1x25 Motor Bracket
- 1xEncoder DC Motor-25 9V188RPM
- 2xCountersunk Head Screw M3*6

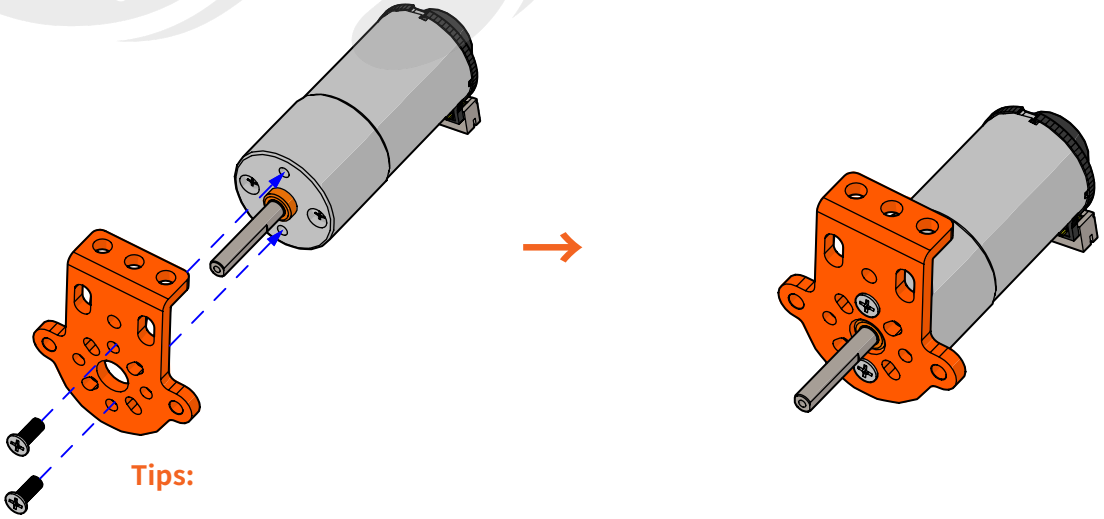

Tips:

Please pay attention to the hole position and direction.

「4DOF Robot Arm」

▶ 13：Assemble Encoder DC Motor -25 (188RPM)

- 1xBeam 0410-186
- 1xEncoder DC Motor-25 9V188RPM Assembly
- 1x8T-Plastic Gear V1.0 (Flat Hole)
- 2xScrew M4*8
- 1xScrew M2*4

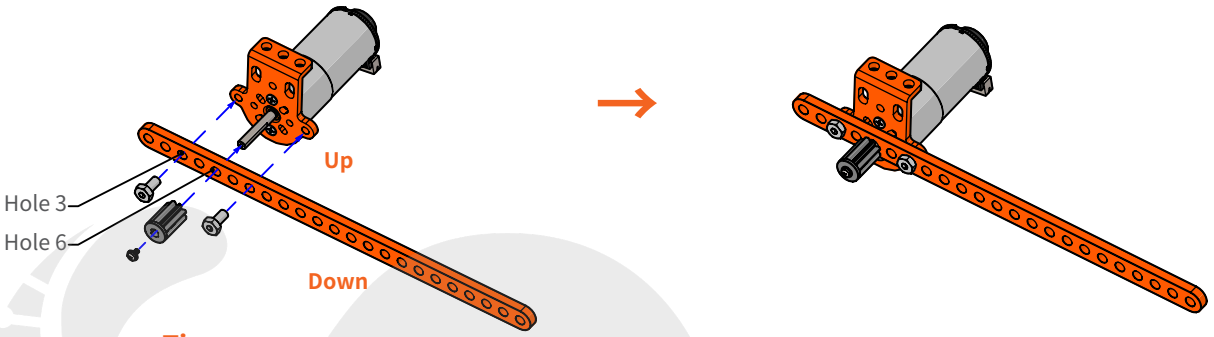

Tips:

Please pay attention to the hole position and direction.

▶ 14：Assemble Intermediate Free Arm

- 1xBeam 0410-186
- 2xSlide Beam 0824-32
- 8xScrew M4*8

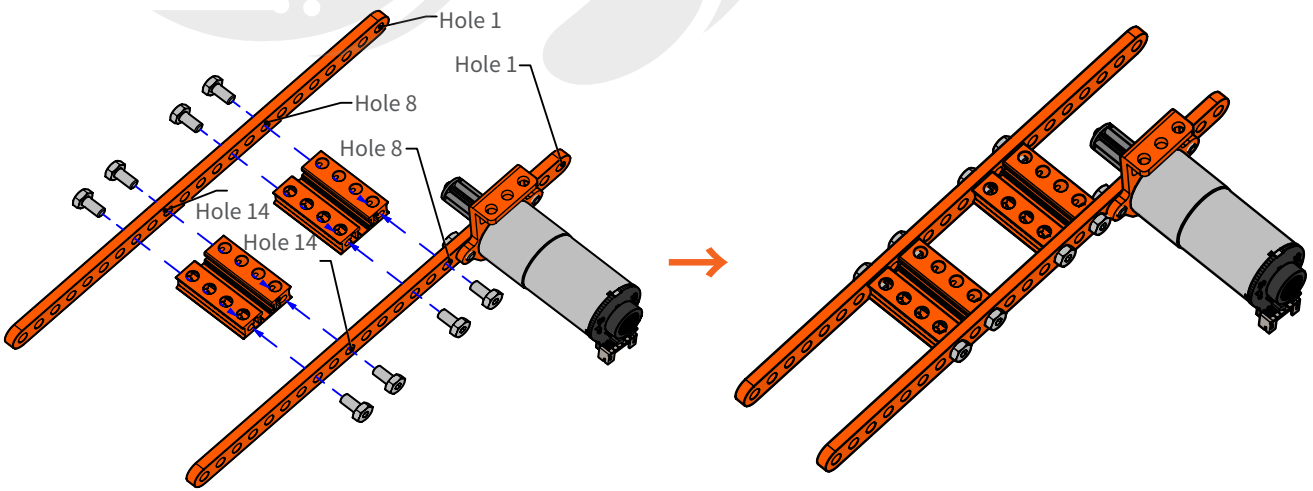

Tips:

Please pay attention to the hole position and direction.

▶ 14：Assemble Intermediate Free Arm

- 1x56T-Plastic Gear V1.0
- 1xNylon Lock Nut M4
- 1xScrew M4*20

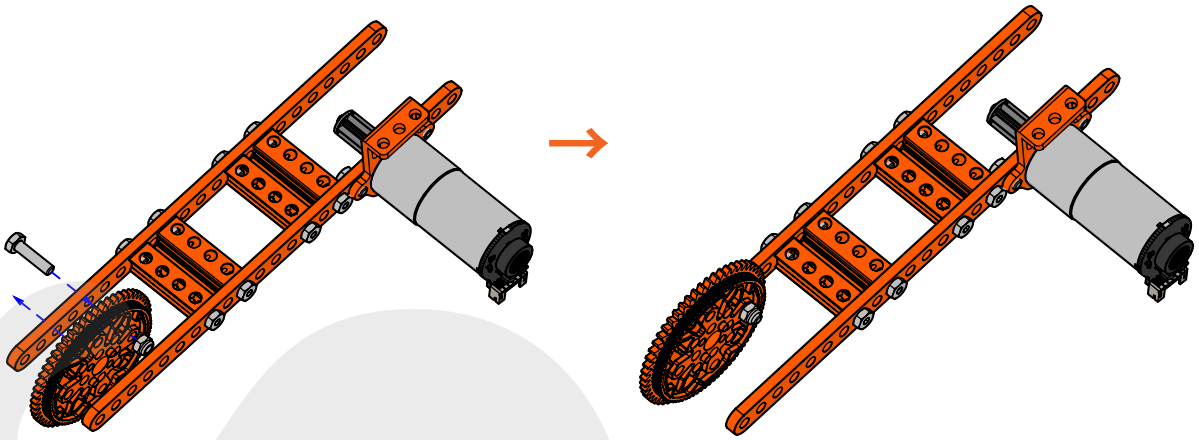

Tips:Please pay attention to the hole position and direction.

▶ 15：Assemble Intermediate Free Arm to the Base

- 1xIntermediate Free Arm Assembly
- 1xFlat Shaft 4-80
- 1xFlange Copper Bearing 4*8*3.5
- 3xHeadless Screw M4*3
- 3xShaft Collar - 4mm

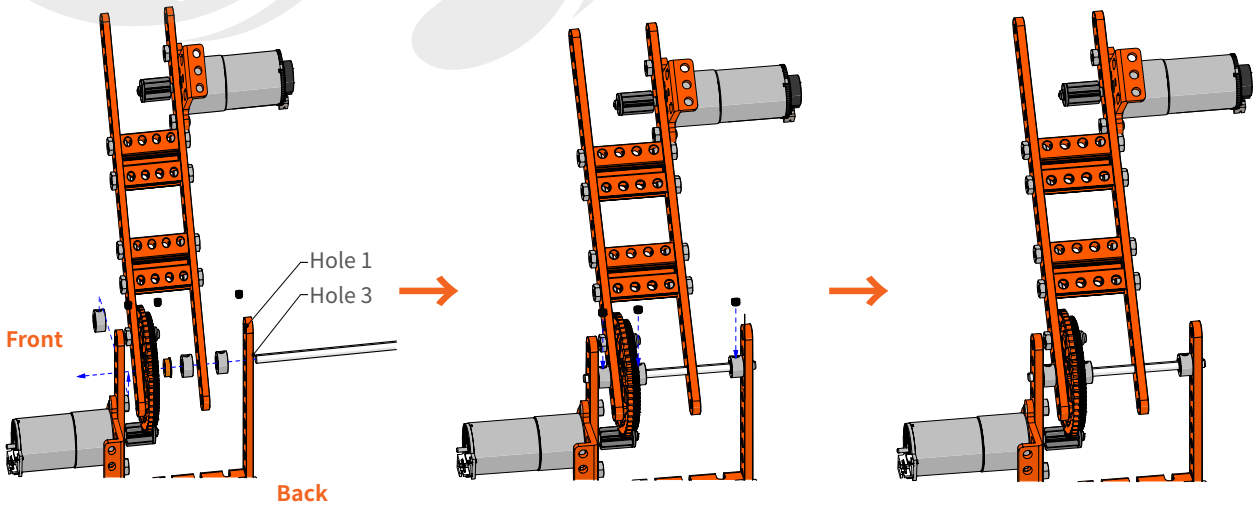

Tips:Please pay attention to the hole position and direction.

「4DOF Robot Arm」

▶ 16：Assemble End Free Arm

- 2xBeam 0410-106
- 1xBeam 0824-16-A
- 1x56T-Plastic Gear V1.0
- 4xScrew M4*8
- 1xScrew M4*20
- 1xNylon Lock Nut M4

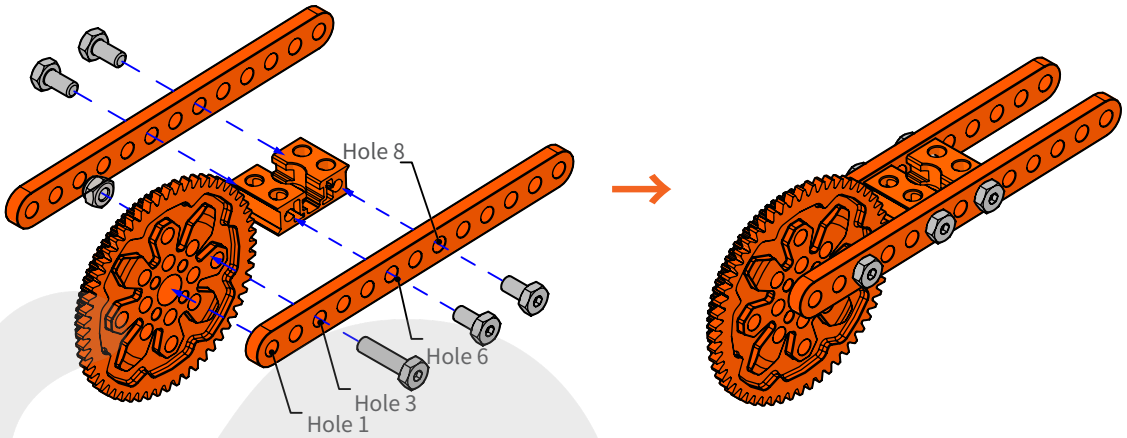

Tips:Please pay attention to the hole position and direction.

▶ 16：Assemble End Free Arm

- 1xEnd Free Arm Assembly
- 1xFlat Shaft 4-56
- 1xFlange Copper Bearing 4*8*3.5
- 3xHeadless Screw M4*3
- 3xShaft Collar - 4mm
- 2xNylon Spacer 4*7*3

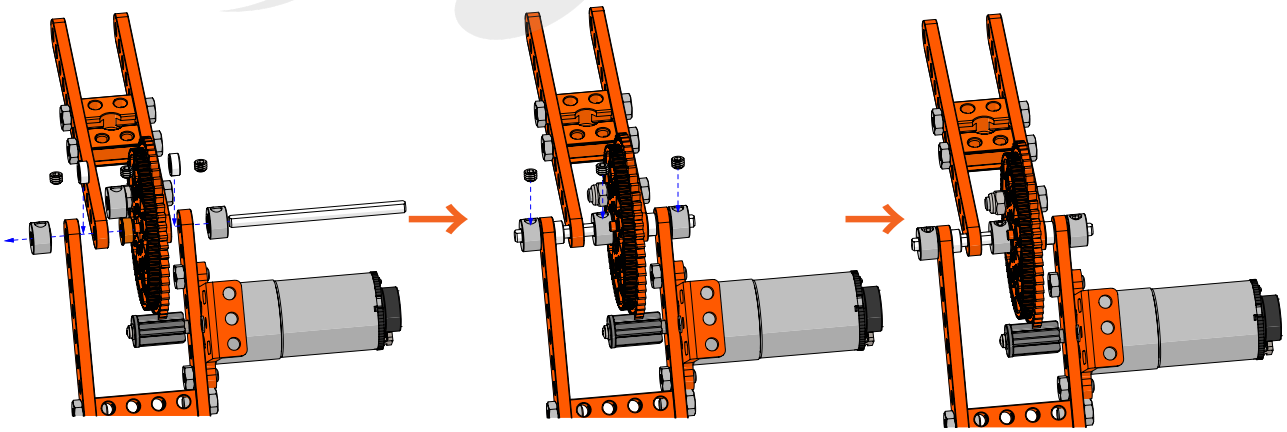

▶ 17：Assemble ELF Mainboard Assembly to Base

1xMainboard ELF Assembly

2xScrew M4*8

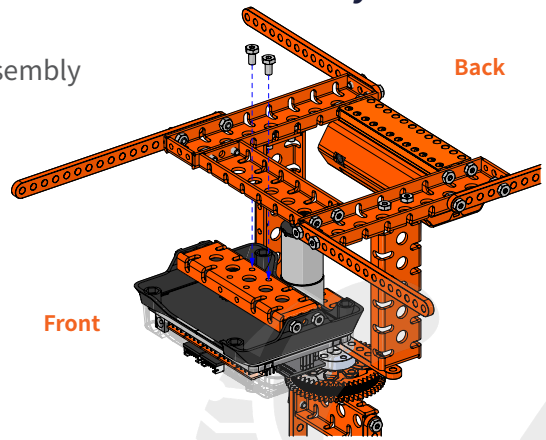

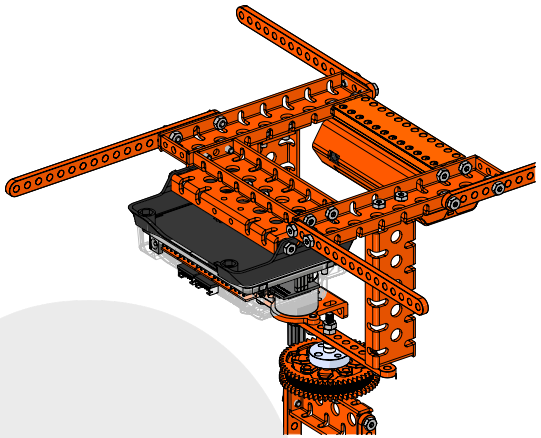

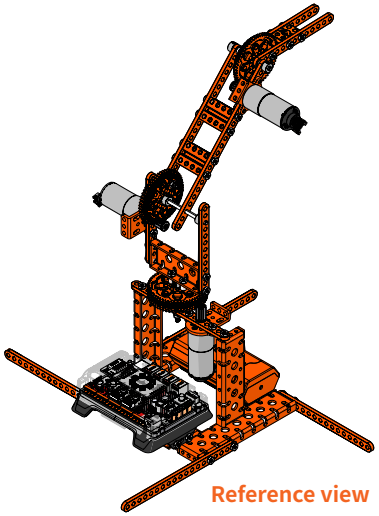

Tips:Please pay attention to the hole position and direction.

▶ 18：Assemble Bracket U1

1xBracket U1

1xMG995 Metal Robot Gripper

4xScrew M4*8

4xNut M4

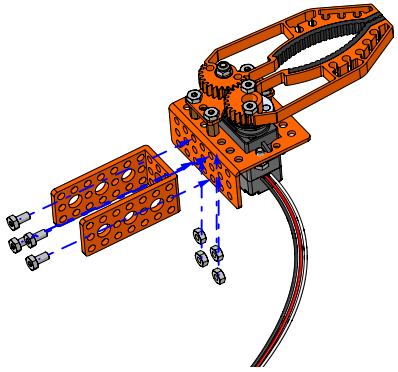

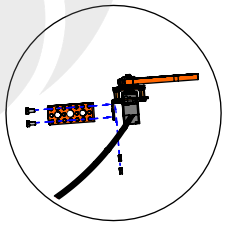

Reference view

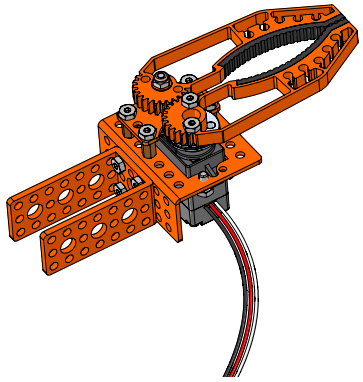

「4DOF Robot Arm」

▶ 19：Assemble Robot Gripper & RJ11 Adapter

- 1xMG995 Metal Robot Gripper Assembly
- 1xRJ11 Adapter V1.0 Module
- 2xScrew M4*25
- 2xScrew M4*35
- 4xNut M4

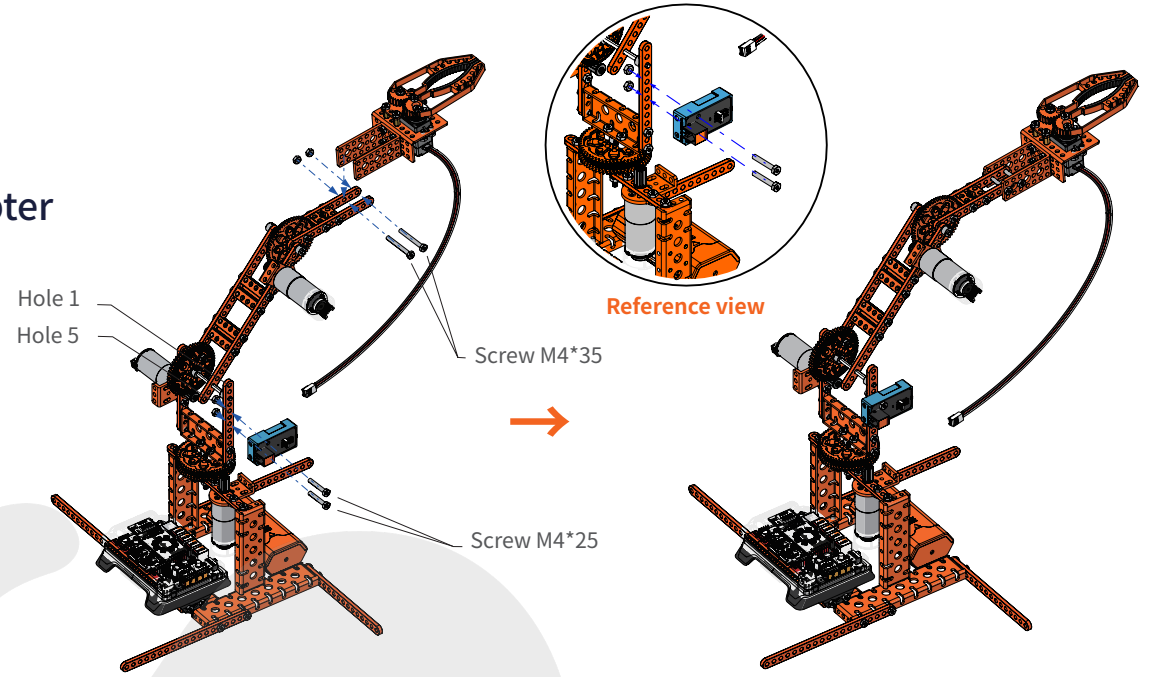

Tips：Please pay attention to the hole position and direction.

▶ 20：Wiring

- 1xEncoder Motor Wire-25cm
- 1xEncoder Motor Wire-70cm
- 1xDC Motor Wire-35cm
- 1xDC Motor Wire-80cm
- 1xPower cord 5.5-2.1
- 1XRJ11 Cable-20cm

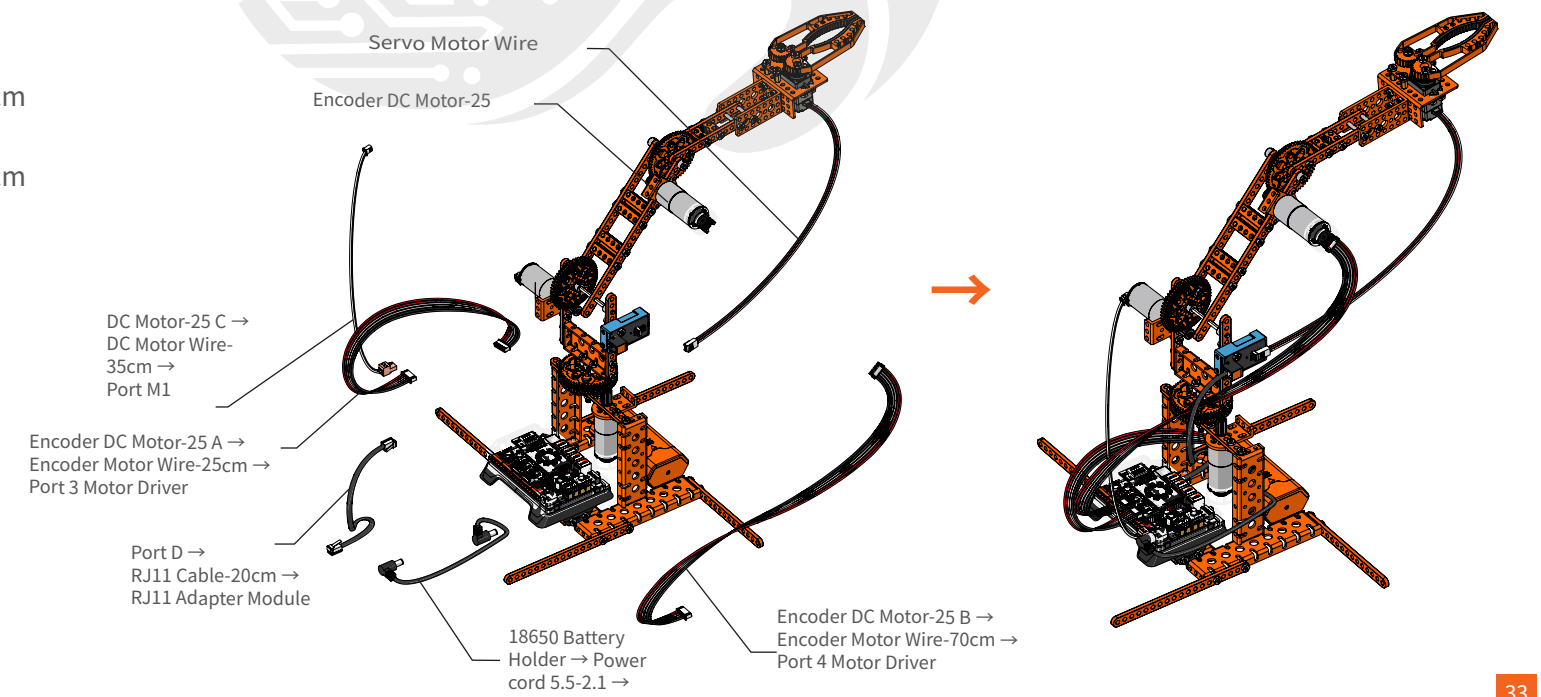

「 Wiring 」

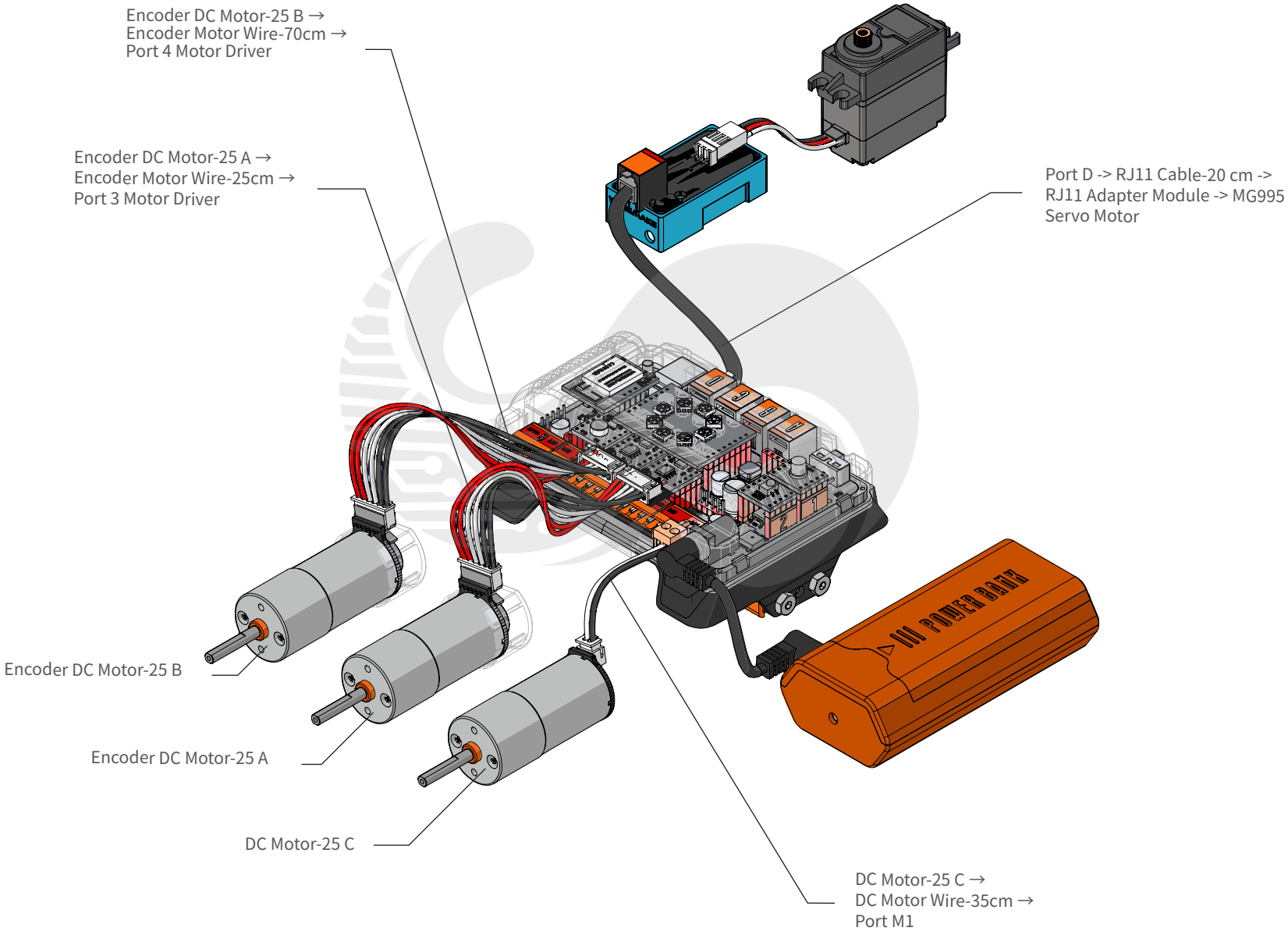
Encoder DC Motor-25 B →
Encoder Motor Wire-70cm →
Port 4 Motor Driver
Encoder DC Motor-25 A →
Encoder Motor Wire-25cm →
Port 3 Motor Driver
Port D -> RJ11 Cable-20 cm ->
RJ11 Adapter Module -> MG995
Servo Motor
POWER BANK
Encoder DC Motor-25 B
Encoder DC Motor-25 A
DC Motor-25 C
DC Motor-25 C →
DC Motor Wire-35cm →
Port M1

「 Completion Diagram 」