「 Chapter 4 Ball Launcher 」

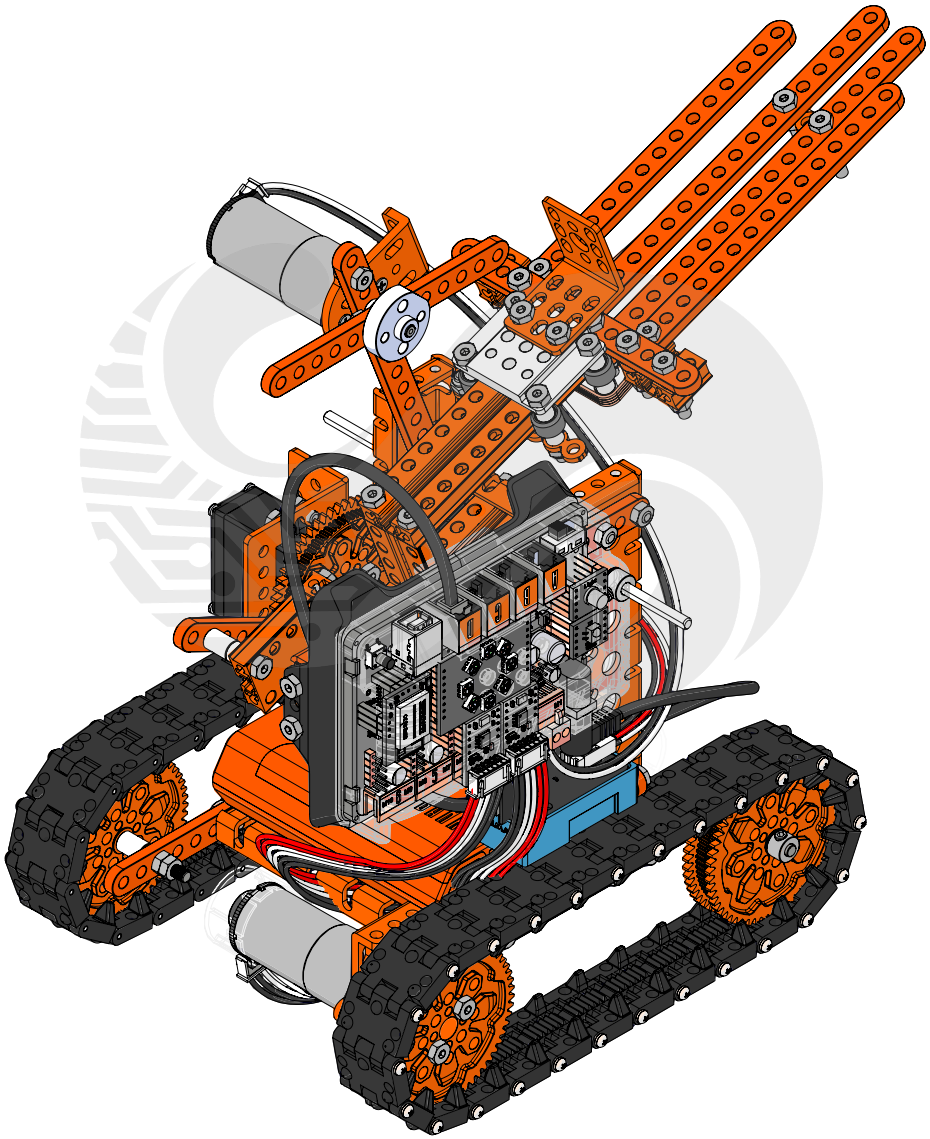

「 Ball Launcher Robot 」

▶ 00：Assembly Guide of Mainboard ELF

- 1x 328P MicroChip Module V1.0
- 1x WeeeMake Bluetooth 4.1 Module
- 1x Light Sensor (Pin)
- 1x IR Receiver (Pin)
- 1x Sound Sensor (Pin)
- 1x ELF Mainboard
- 1x ELF Mainboard Lid
- 1x ELF Mainbaord Base
- 1x RGB LED - 8 (Pin)
- 2x DC/Encoder Motor Driver

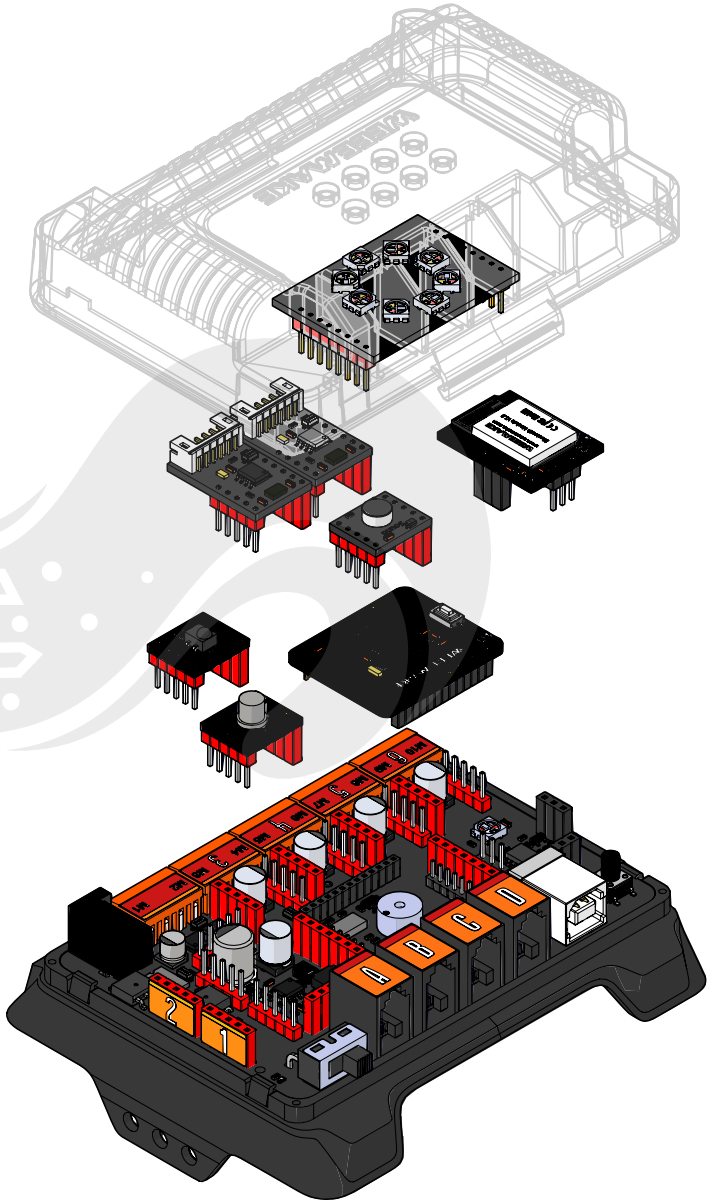

「 Ball Launcher Robot 」

▶ 00：Assembly Guide of Mainboard ELF

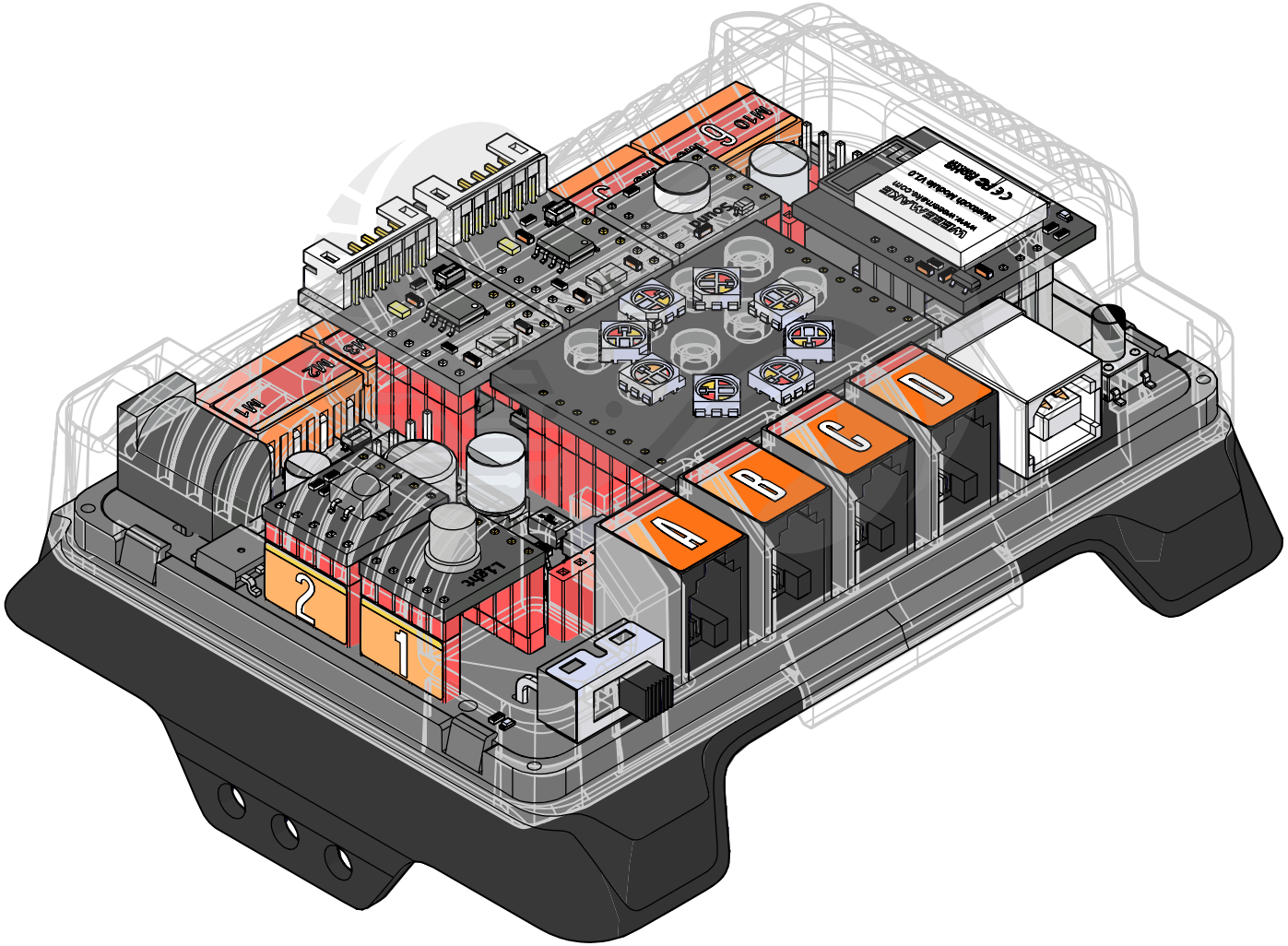

「 Ball Launcher Robot 」

▶ 00：Assembly Guide of Mainboard ELF

- 4xScrew M4*8
- 2xLinkage 0208-24
- 1x Beam 1030-100-B
- 1x ELF Mainboard Assembly

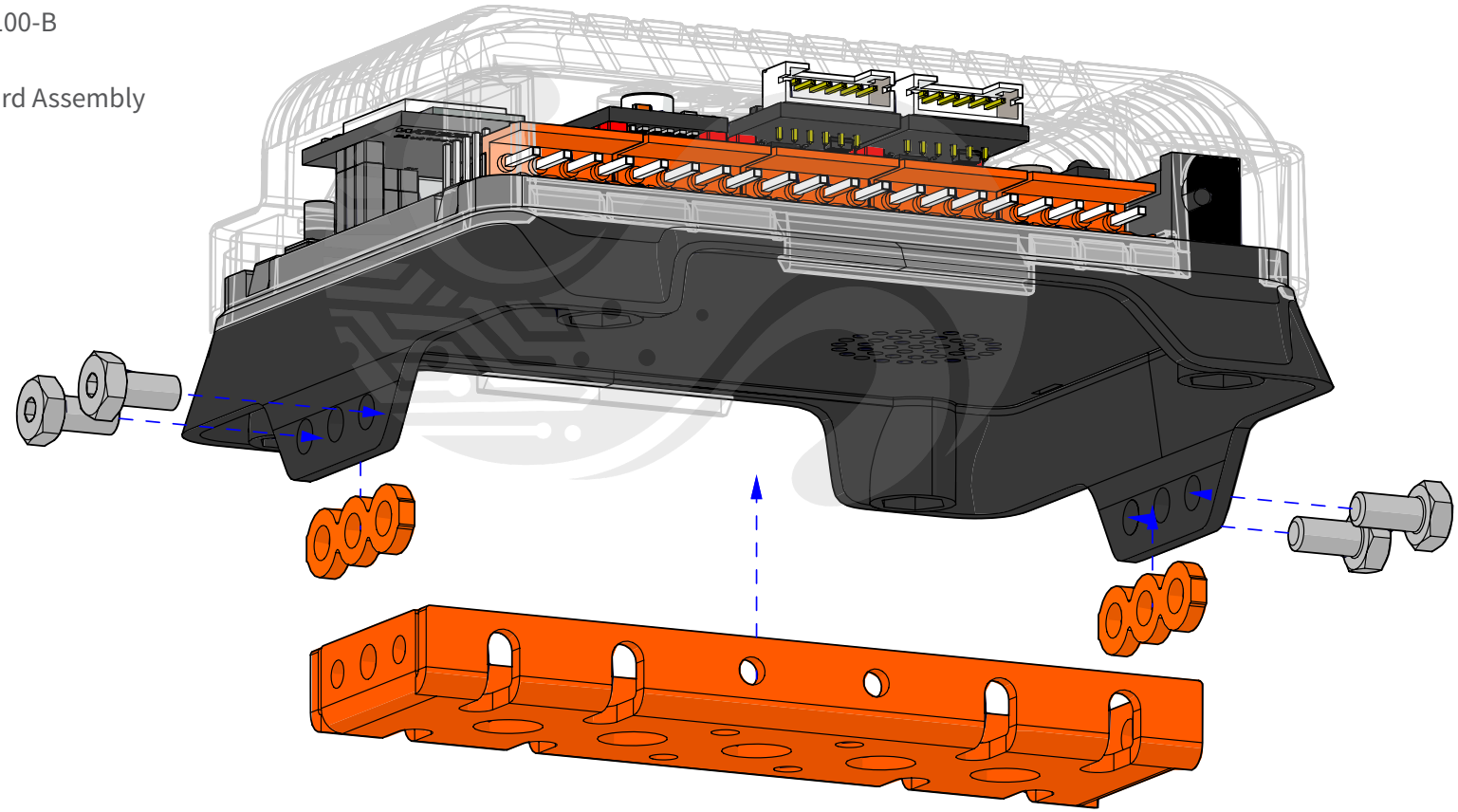

「Ball Launcher Robot」

▶ 00：Assembly Guide of Mainboard ELF

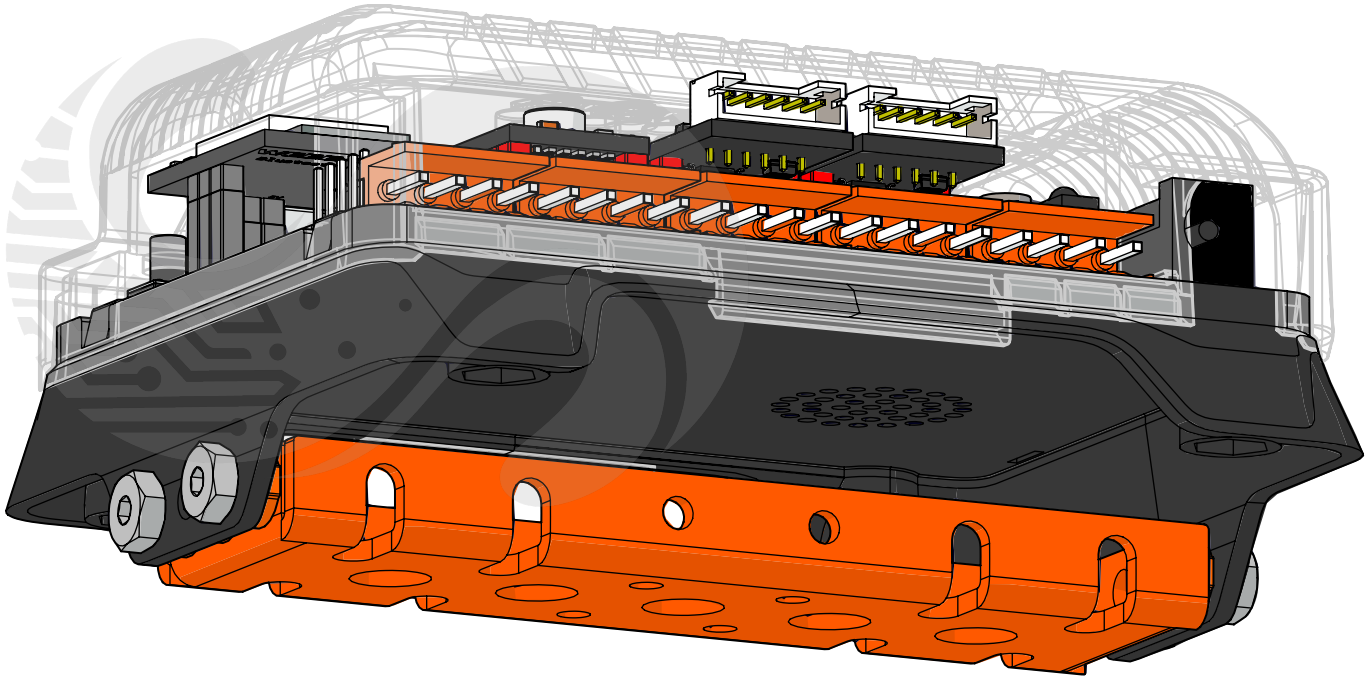

Tips:

The default sensors on mainboard ELF is installed as follows:

Port 1 - Light Sensor

Port 2 - IR Receiver

Port 3 & 4 - DC/Encoder Motor Driver

Port 5 - Sound Sensor

MCU Port - 328P Micro Chip

Communication Port - Bluetooth Module

Special port - RGB LED -8 Module

「Ball Launcher Robot」

▶ 01：Assemble Base Structure

- 1x Beam 1030-100
- 1x Beam 1030-100-B
- 2x Beam 0410-186
- 8x Screw M4*8

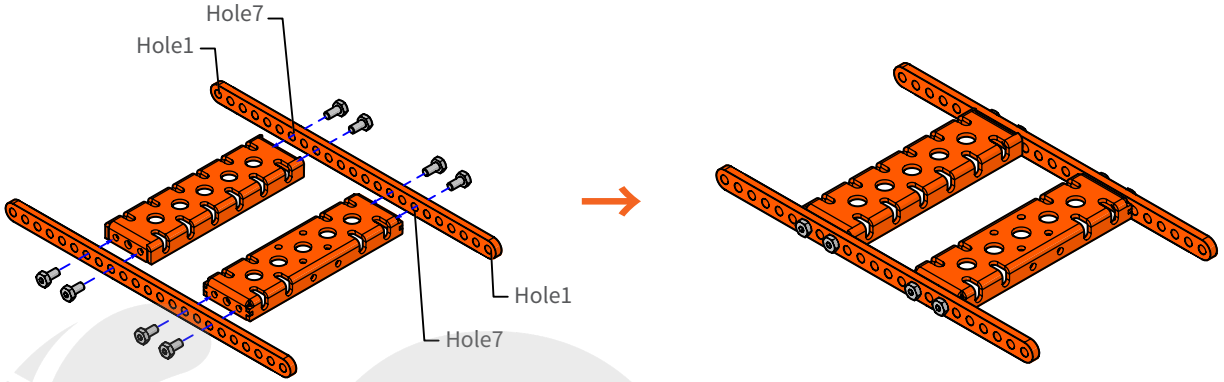

▶ 02：Assemble Driven Wheel

- 4x 56T-Plastic Gear
- 2x Threaded shaft 4-48
- 4x Flange Copper Bearing
- 2x Shaft Collar - 4mm
- 4x Nut M4
- 2x Nylon Spacer 4*7*10
- 2x Headless Screw M4*3

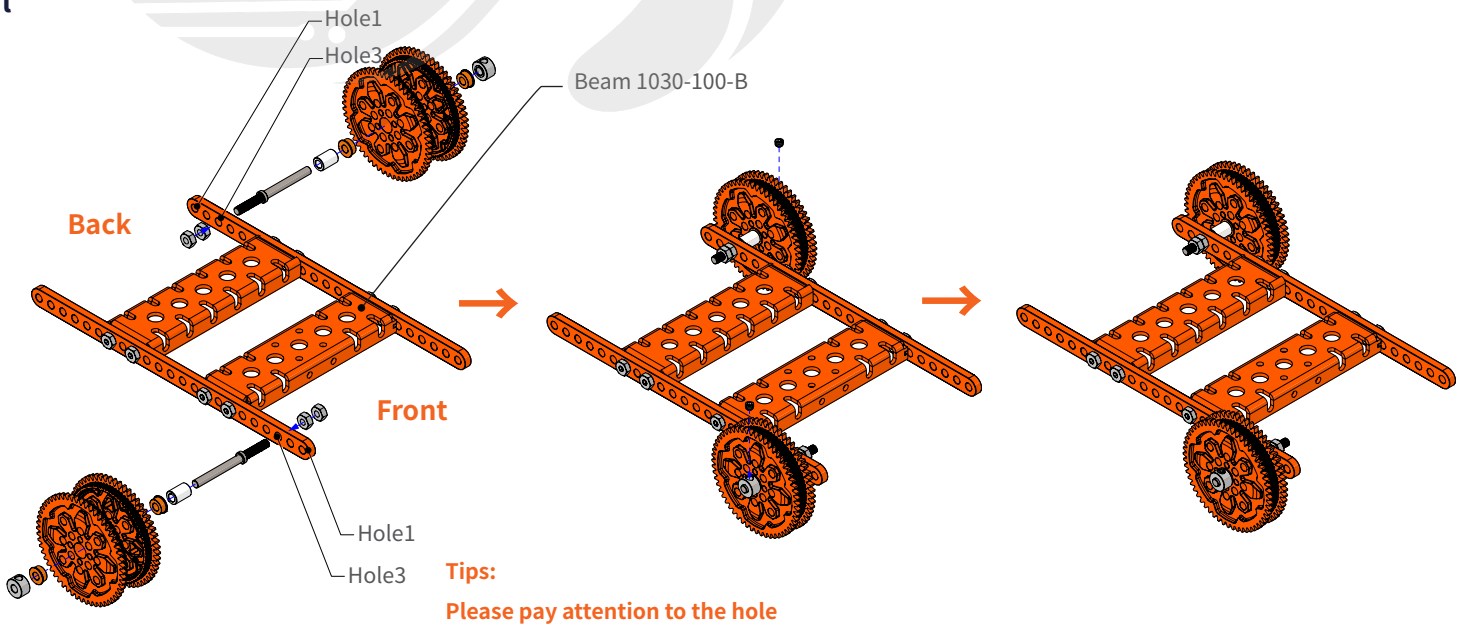

Tips:
Please pay attention to the hole position and direction.

「Ball Launcher Robot」

▶ 03：Assemble Active Wheel

- 2x56T-Plastic Gear
- 1xDriving Flange Hub 4mm
- 2xScrew M4*20

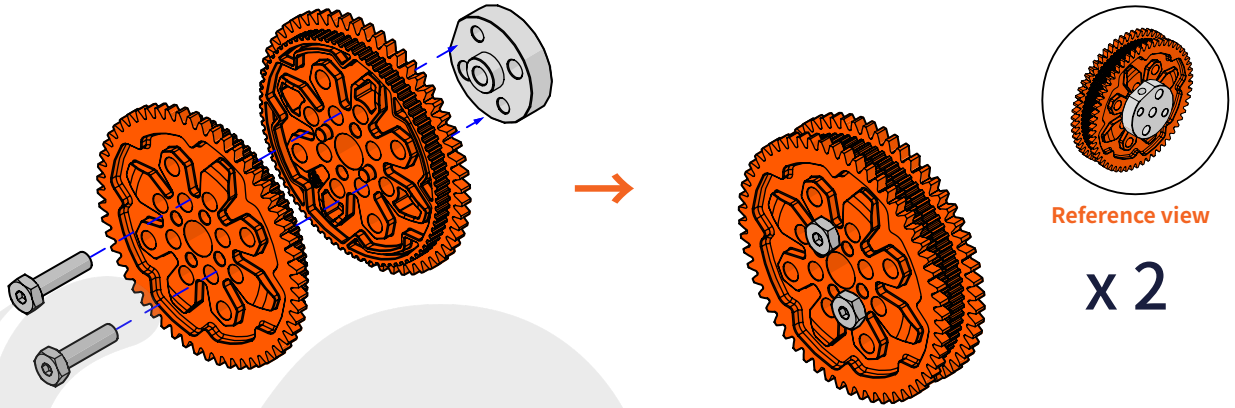

▶ 04：Assemble the Encoder DC Motor-25(188RPM)

- 2x Countersunk Head Screw M3*6
- 1x25 Motor Bracket
- 1x Encoder DC Motor-25 (188RPM)

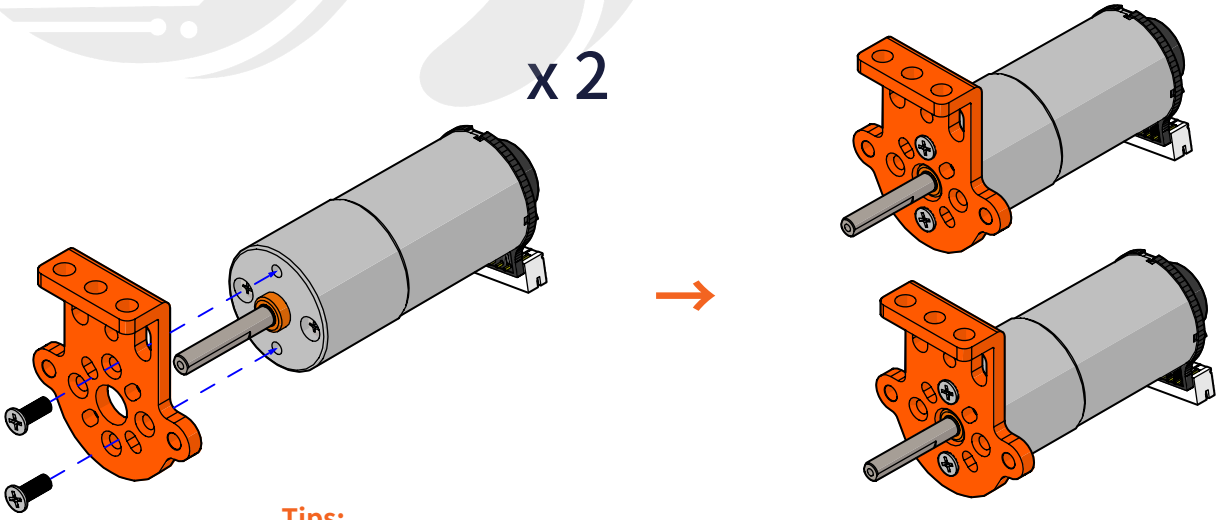

Tips:
Please pay attention to the bracket direction and screw hole position.

「 Ball Launcher Robot 」

▶ 05： Assemble Base Structure Motor


4x Screw M4*8


2x Encoder DC Motor-25 (188RPM)Assembly

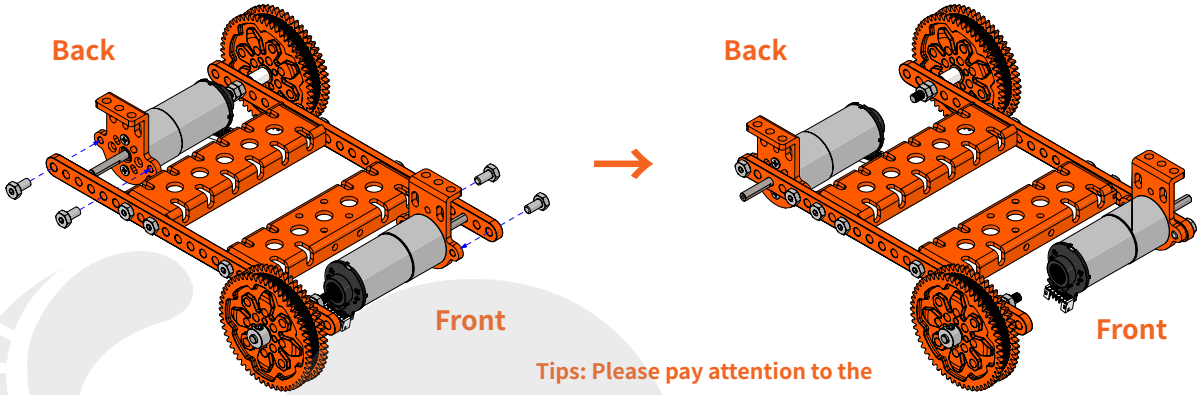

Tips: Please pay attention to the hole position and direction.

▶ 06： Assembly and Fix The Active Wheel


2x56T-Plastic Gear Assembly


4x Nylon Spacer 4*7*3


2xHeadless Screw M4*5

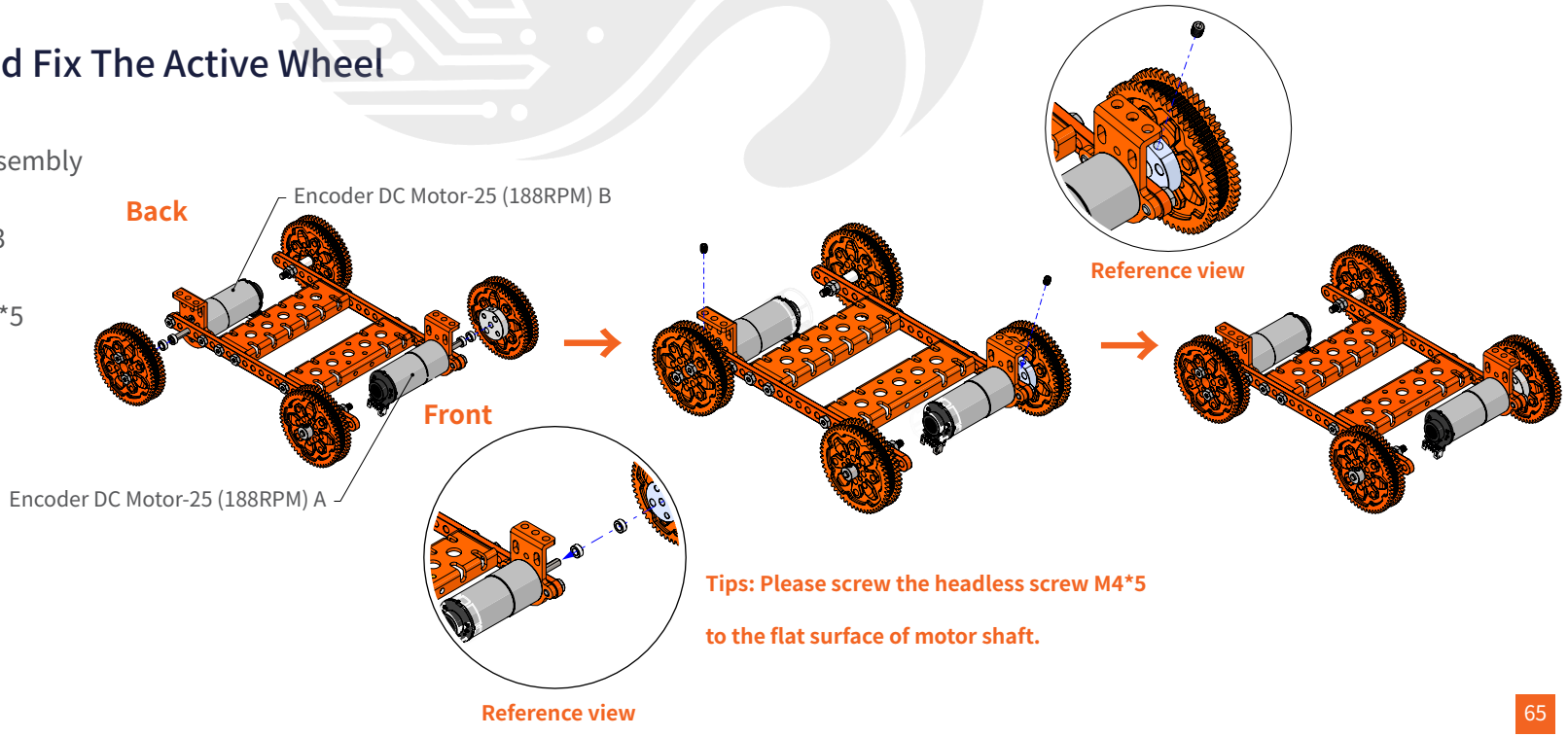

Tips: Please screw the headless screw M4*5 to the flat surface of motor shaft.

「Ball Launcher Robot」

▶ 07：Assemble Caterpillar Track


52xTrack


52xTrack Axle 2*26

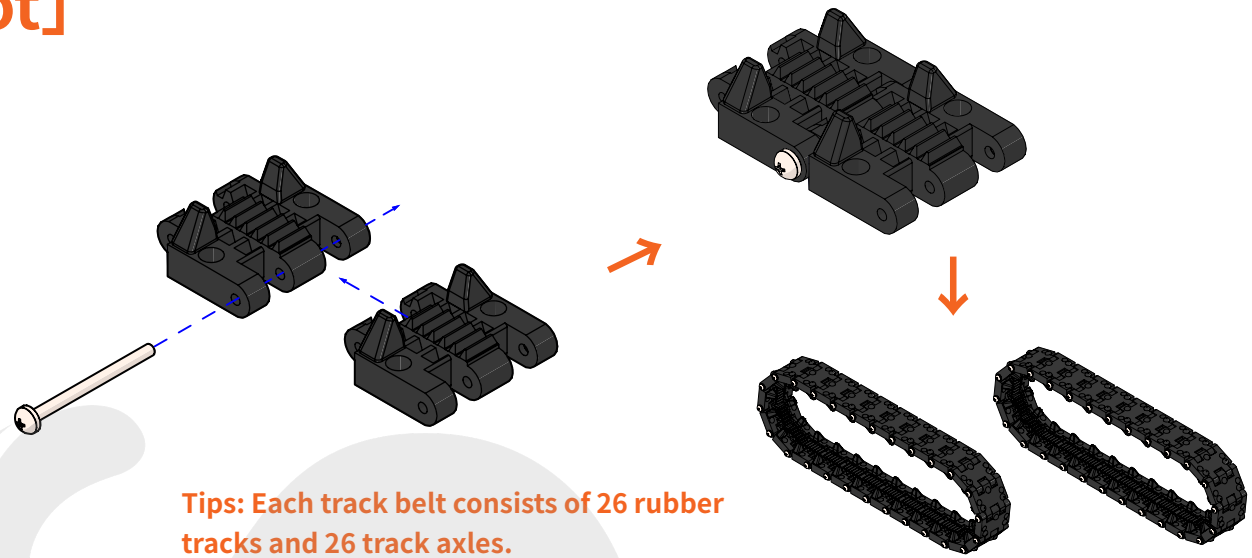

Tips: Each track belt consists of 26 rubber tracks and 26 track axles.

▶ 07：Assemble Caterpillar Track


2xTrack Assembly

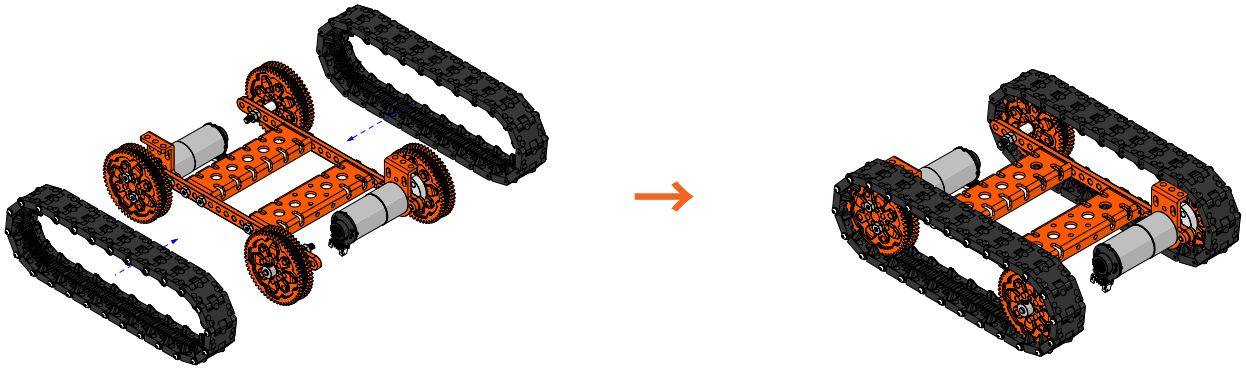

Tips: Pay attention to the correct direction.

「 Ball Launcher Robot 」

▶ 08：Assemble Beam 1030-132

- 1x Beam 0410-130
- 1x Beam 1030-132
- 2x Screw M4*10
- 2x Nut M4

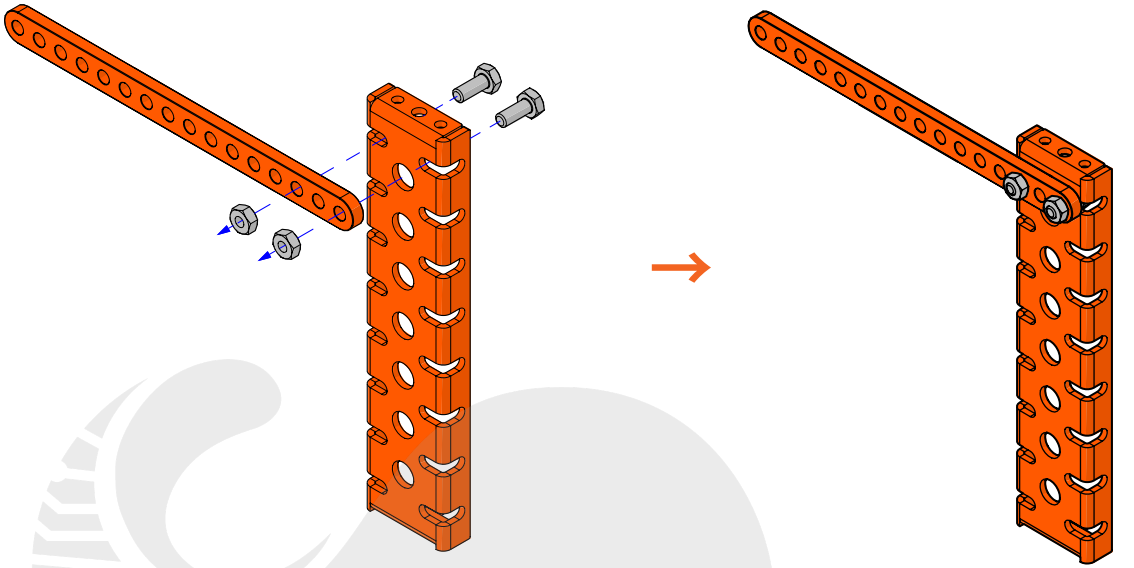

▶ 08：Assemble Beam 1030-132

- 1x Beam 1030-132 Assembly
- 1x Beam 1030-132
- 4x Screw M4*8

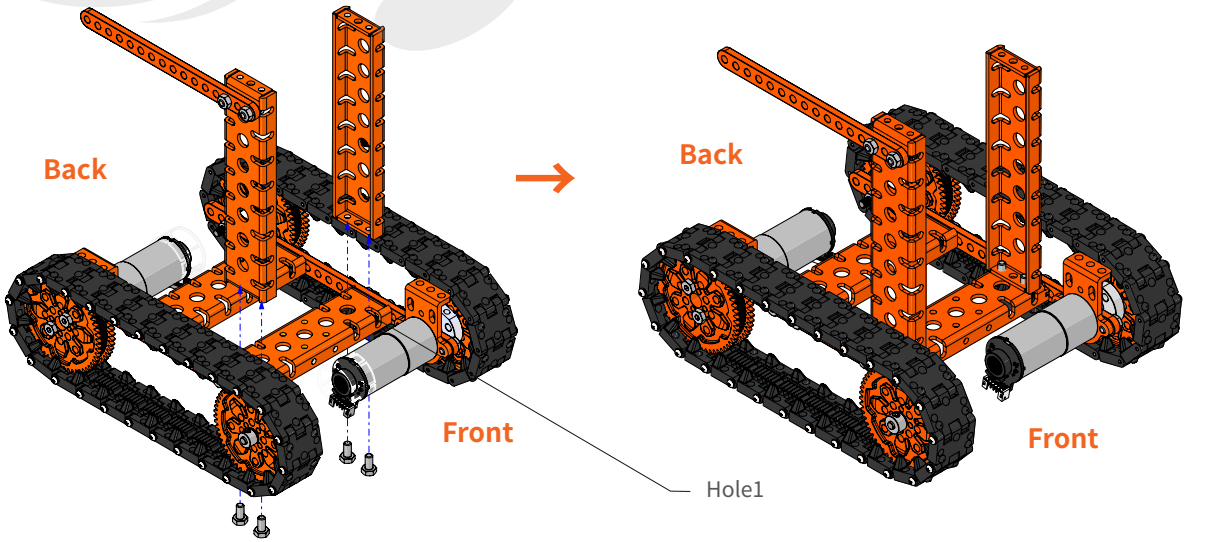

「 Ball Launcher Robot 」

▶ 09：Assemble Beam 0410-154

- 1x Beam 0410-154
- 2x Screw M4*10
- 2x Nut M4

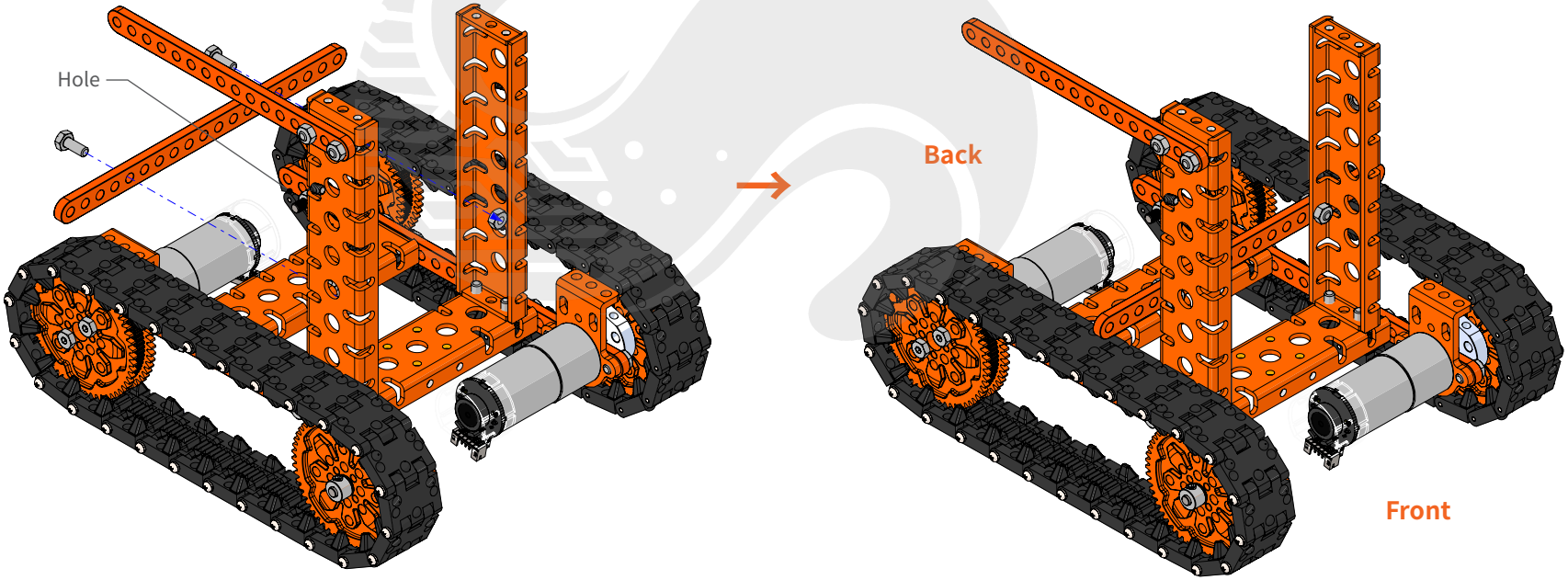

「 Ball Launcher Robot 」

▶ 10：Assemble the DC Motor-25

- 1x25 Motor Bracket
- 1xDC Motor-25 (50RPM)
- 2xCountersunk Screw M3x6

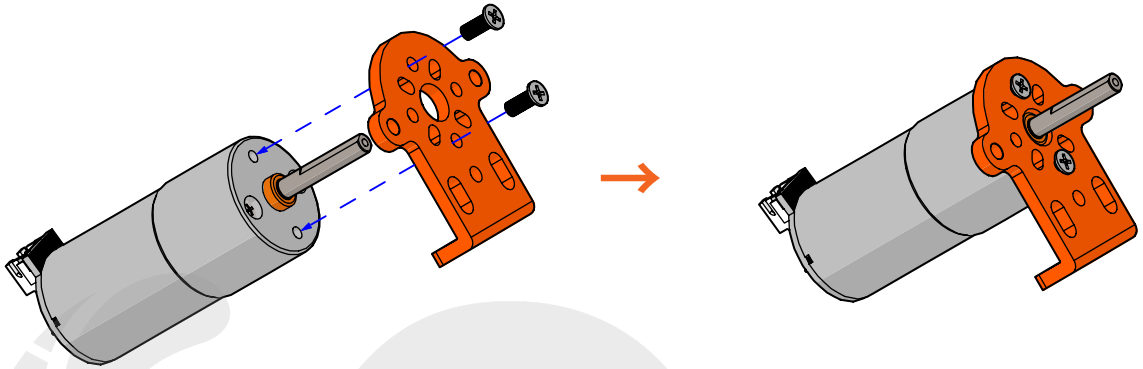

Tips:Please pay attention to the bracket direction and screw hole position

▶ 11：Assemble Beam 0410-130

- 1xDC Motor-25 (50RPM) Assembly
- 1x Beam 0410-130
- 2x Screw M4*8

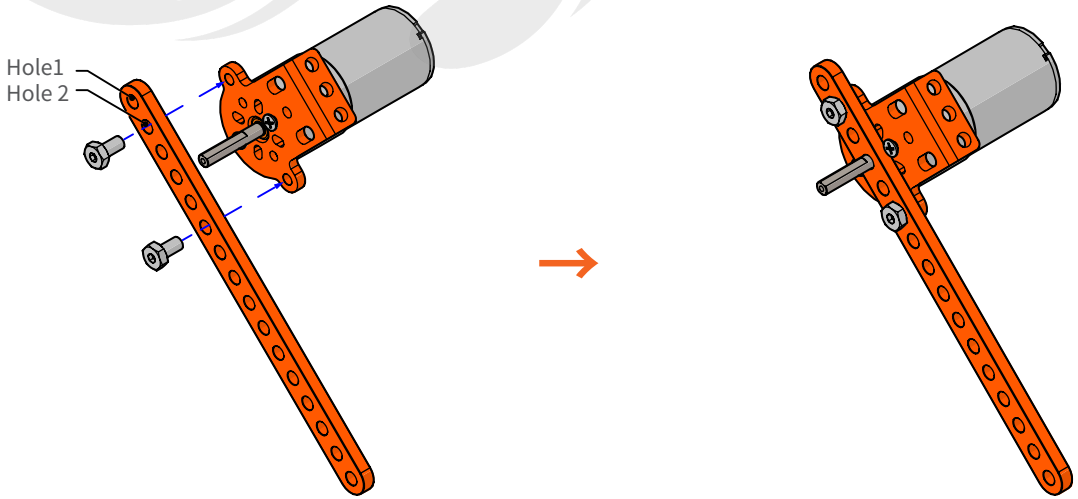

「Ball Launcher Robot」

▶ 12：Assemble Beam 0410-106


1xBeam 0410-106


1xDriving Flange Hub 4mm


2xScrew M4*8

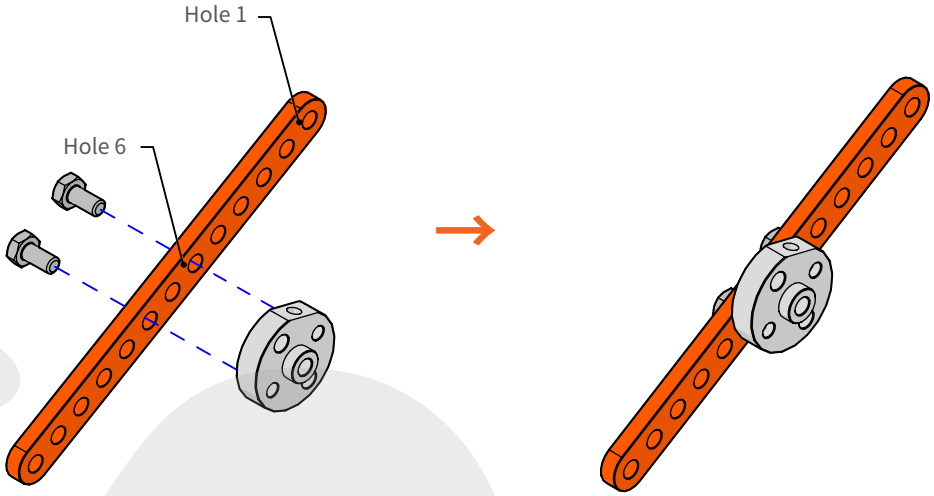

Tips:Please pay attention to the holeposition and direction.

▶ 13：Assemble Beam 0410-106 on DC Motor-25


2xNylon Spacer 4*7*2


1xHeadless Screw M4*5

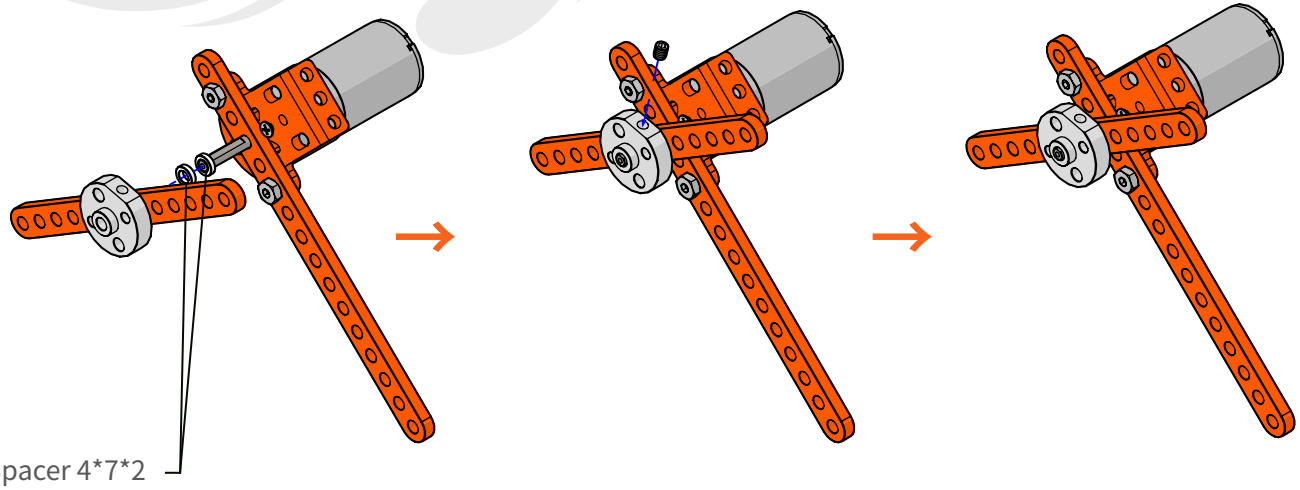

Tips: Please screw the headless screw M4*5 to the flat surface of motor shaft.

「Ball Launcher Robot」

▶ 14：Assemble Beam1030-68

- 1xBeam 1030-68
- 2xScrew M4*8

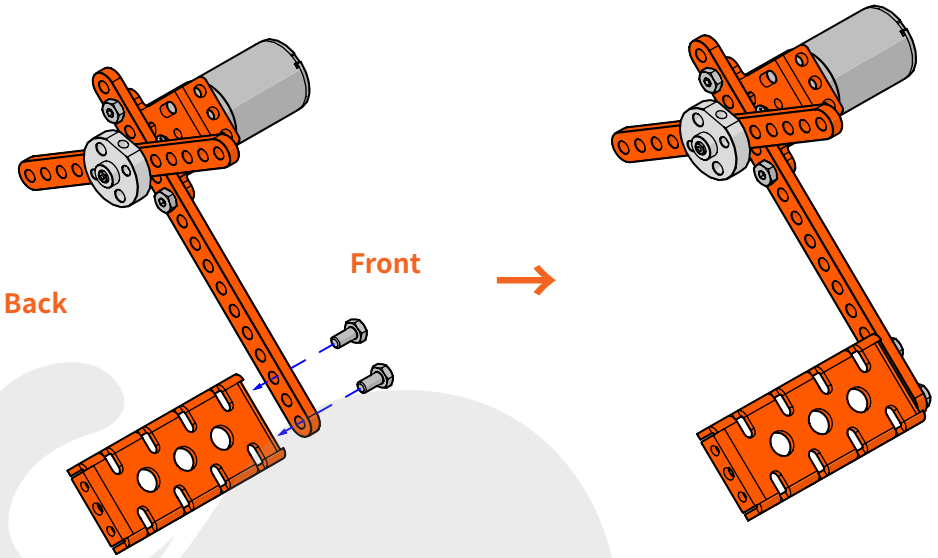

▶ 15：Assemble Flat Shaft 4-160

- 4xNylon Spacer 4*7*2
- 2xNylon Spacer 4*7*3
- 2xShaft Collar - 4mm
- 2xFlange Copper Bearing
- 1xFlat Shaft 4-160
- 2xHeadless Screw M4*3

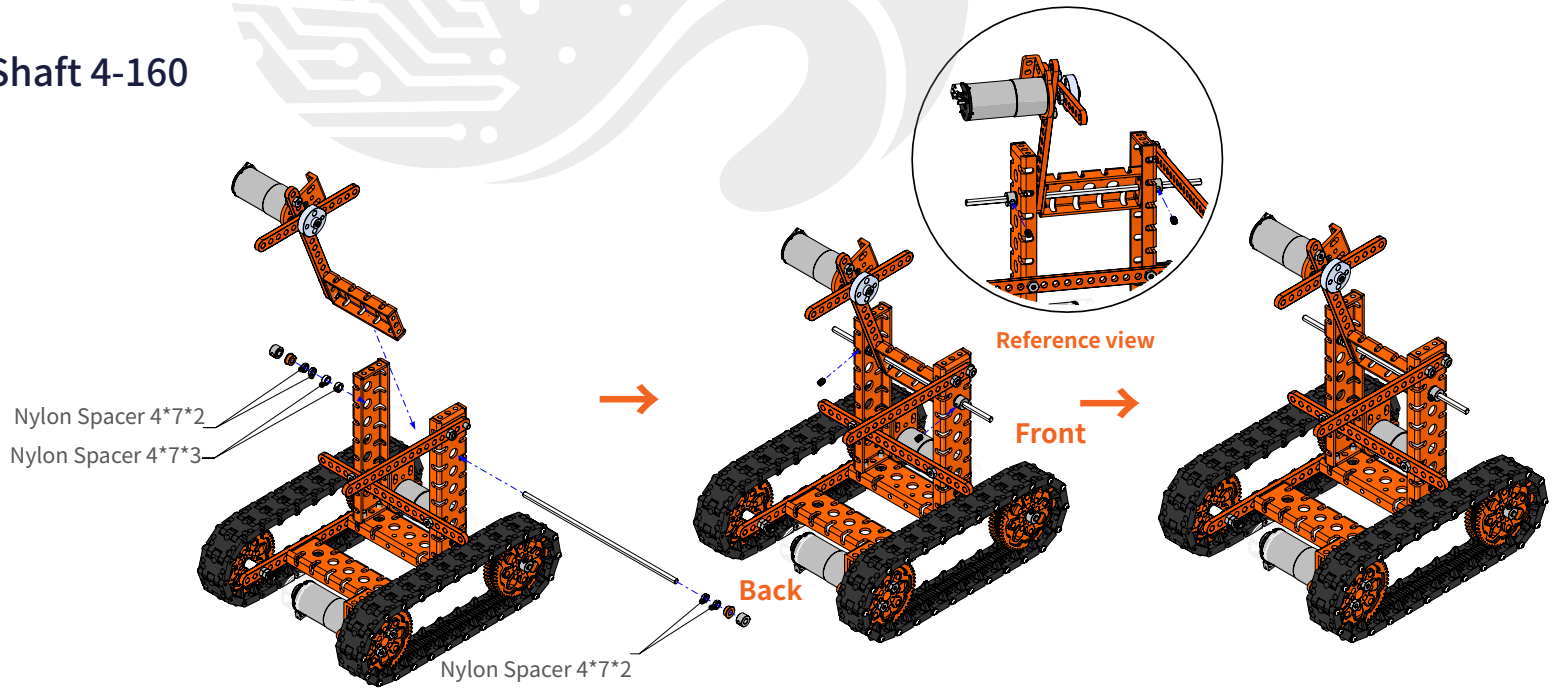

Tips:When installing the Flat Shaft 4-160 symmetrically, pay attention to lock the Headless Screw M4*3 appropriately to ensure flexible rotation of the structure.

「 Ball Launcher Robot 」

▶ 16：Assemble the 18650 Lithium Battery

- 2x18650 Lithium Battery
- 1x18650 Battery Holder Cover
- 1x18650 Battery Holder
- 2xScrew M4*8
- 2xScrew Nut M4

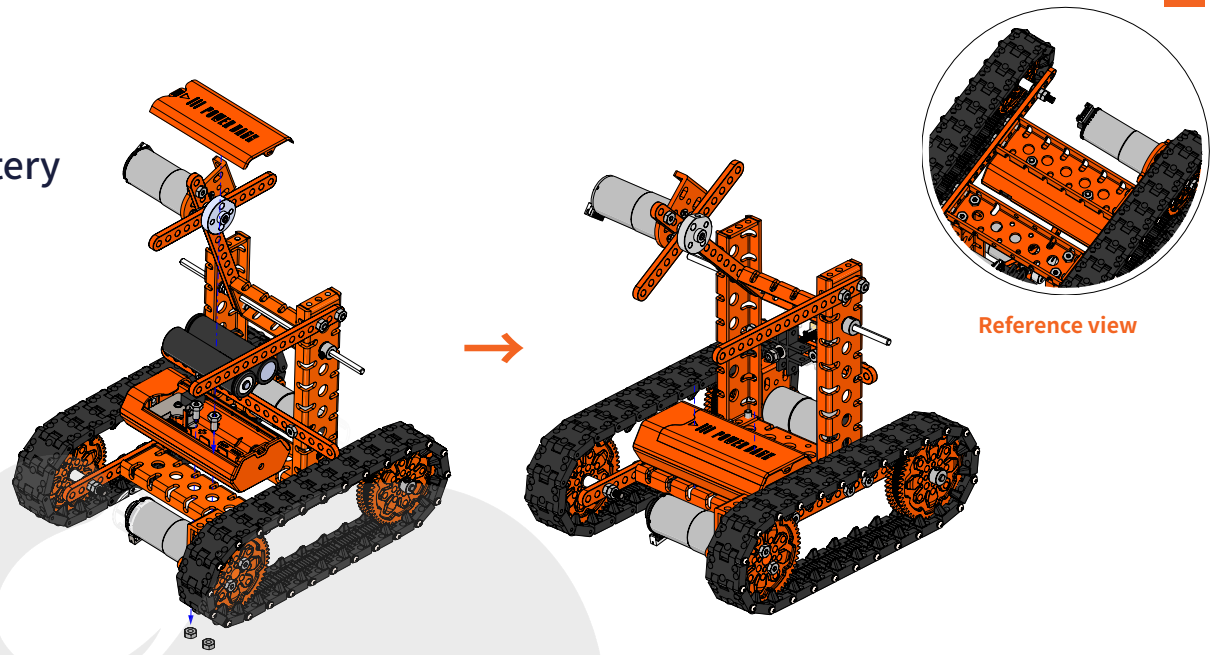

▶ 17：Assemble Slide Beam 0824

- 1xSlide Beam 0824-32
- 1xSlide Beam 0824-80
- 1xSlide Beam 0824-96
- 4xScrew M4*14

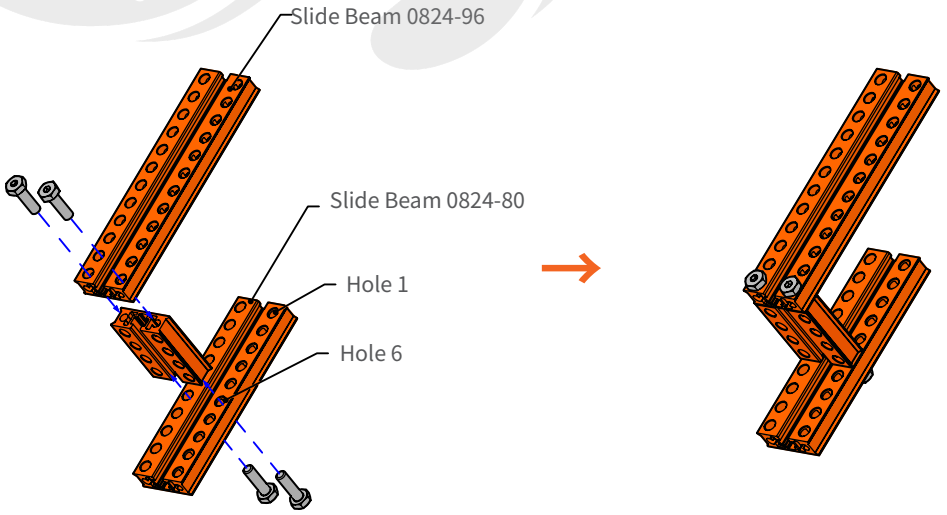

「Ball Launcher Robot」

▶ 17：Assemble the Linear Motion Slide Unit A

- 1x Linear Motion Block 32x40
- 1x Linkage 0208-56
- 4xBearing MR74z
- 4xWheel 5.5*7*9
- 2xScrew M4*25
- 2xScrew M4*30
- 4xNylon Lock Nut M4
- 8xAluminum Column 4*6*6

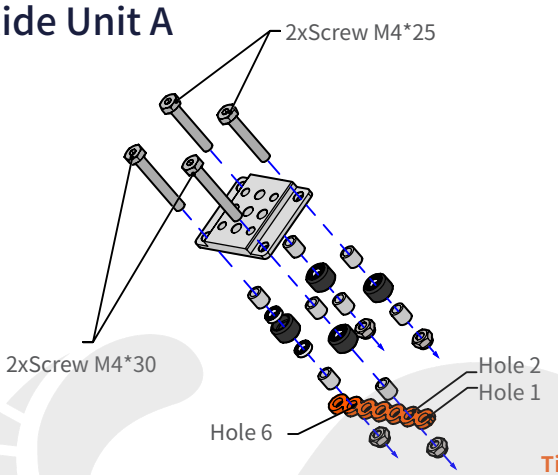

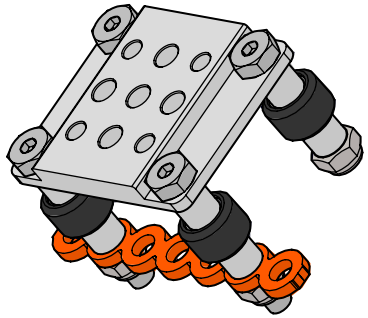

Tip: Pay attention to the hole position and direction of slide unit, neither be too tight to stuck sliding, nor too loose to shake on beam.

▶ 18.Assemble the Linear

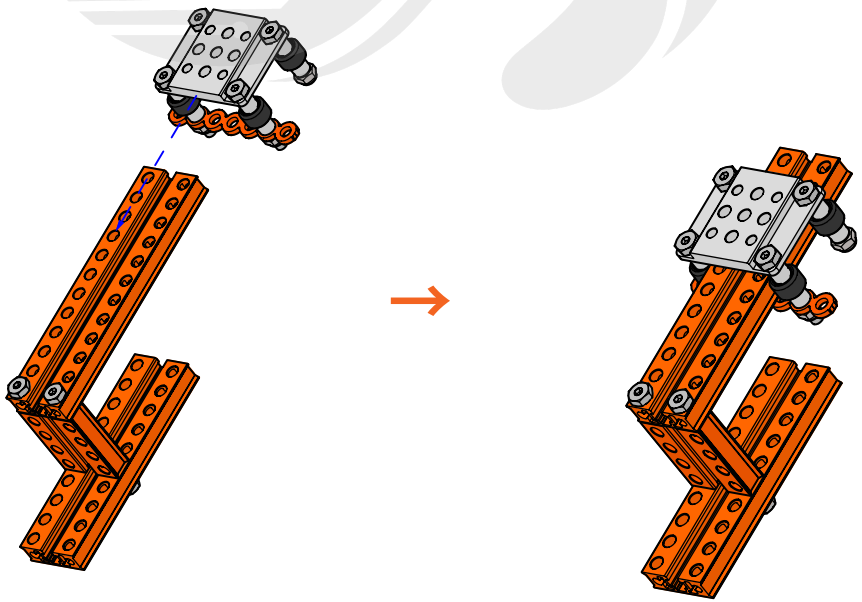

Tips:Please pay attention to the holeposition and direction.

「Ball Launcher Robot」

▶ 18：Assemble Beam 0410

- 1xBeam 0410-106
- 2xBeam 0410-154
- 2xScrew M4*25
- 2xNylon Lock Nut M4

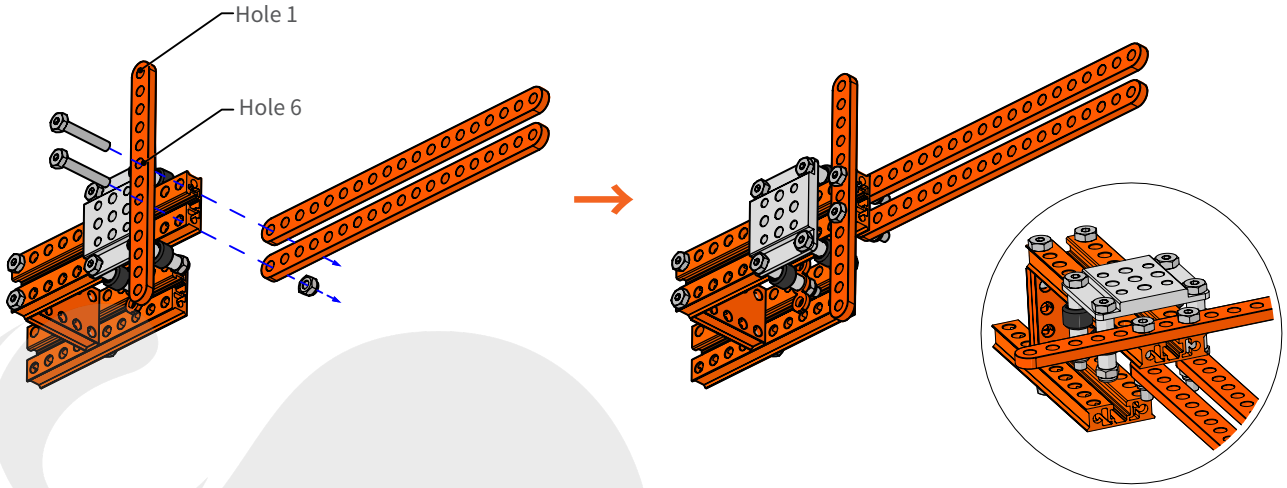

Reference view

▶ 19：Assemble Beam

- 2xBeam 0824-16-A
- 2xScrew M4*20
- 4xScrew M4*25
- 6xNut M4
- 4xNylon Spacer 4*7*2
- 2xBeam 0410-130

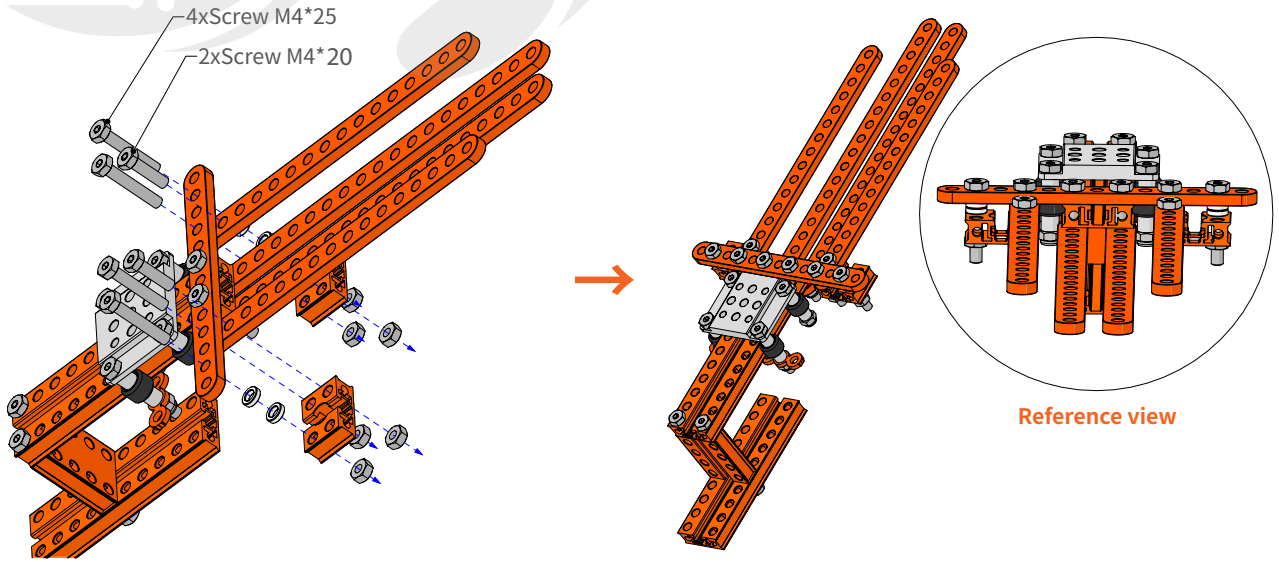

Reference view

「 Ball Launcher Robot 」

▶ 20：Assemble Bracket 3x3

1xBracket 3x3

2xScrew M4*8

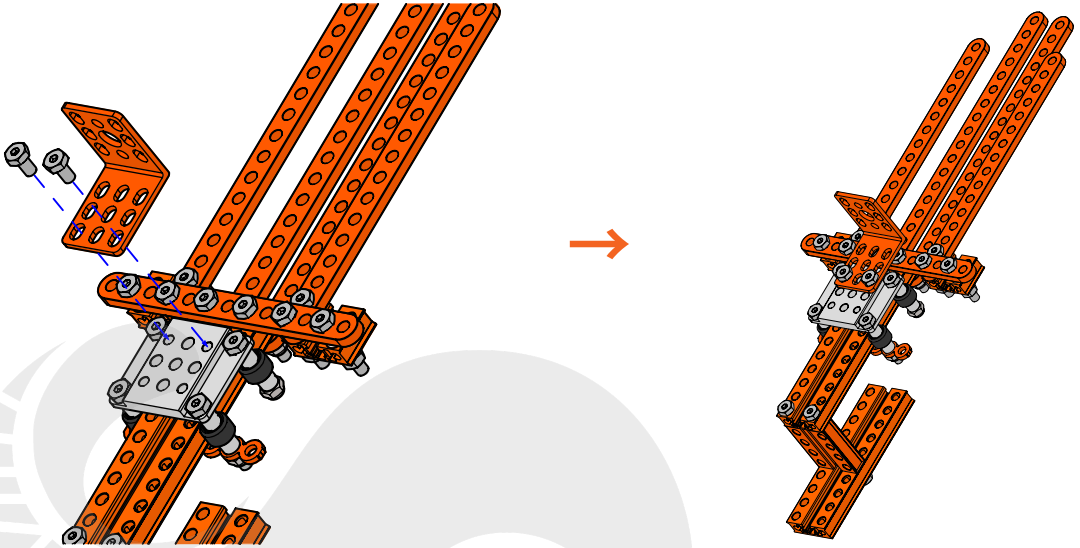

▶ 21：Assemble Screw M4*8

1x Screw M4*8

1xNylon Lock Nut M4

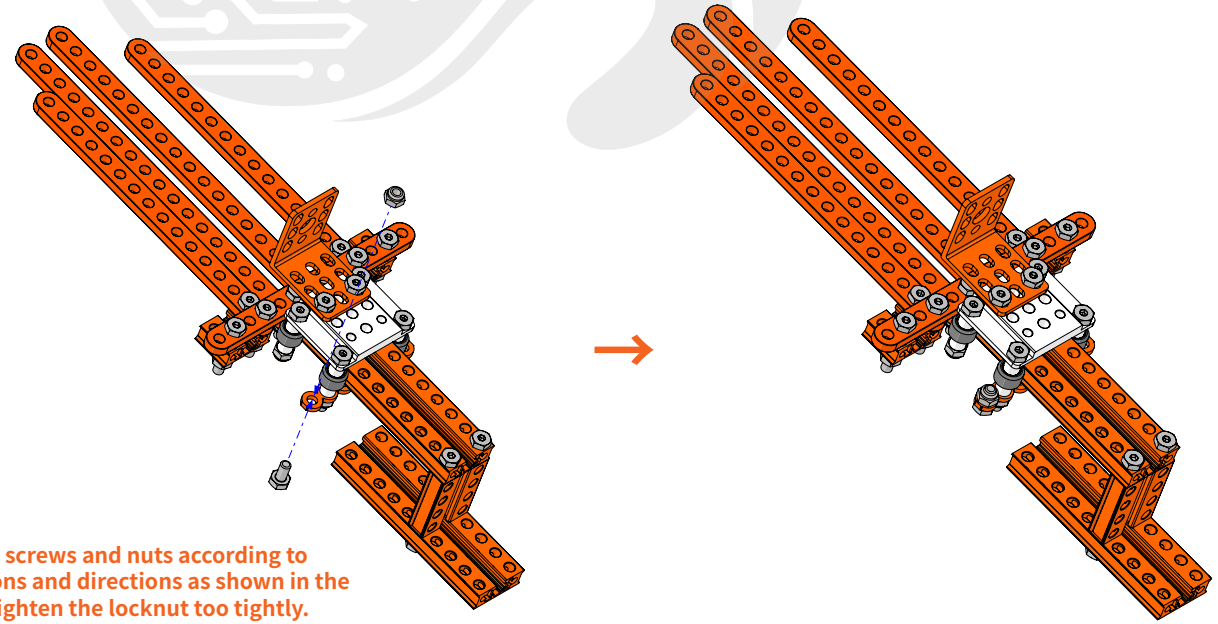

Tips: Install the screws and nuts according to the hole positions and directions as shown in the figure. Do not tighten the locknut too tightly.

「 Ball Launcher Robot 」

▶ 22：Assemble Screw M4*25


1xLinkage 0208-24


2xScrew M4*25


2xNut M4

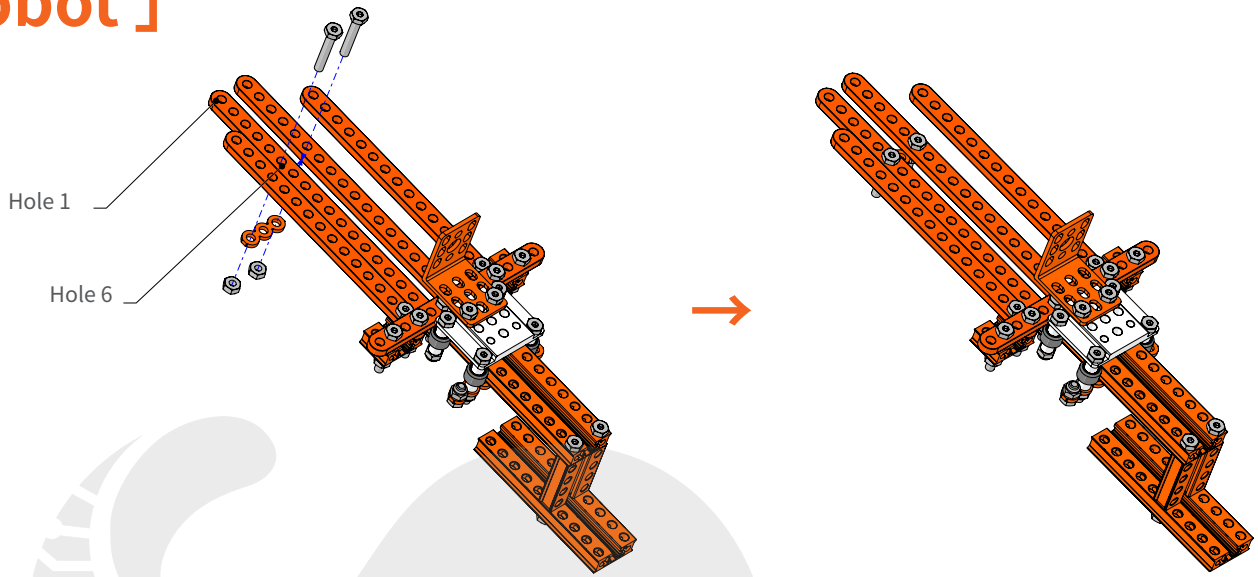

▶ 23：Assemble Rubber Band 2*60


4x Rubber Band 2*60

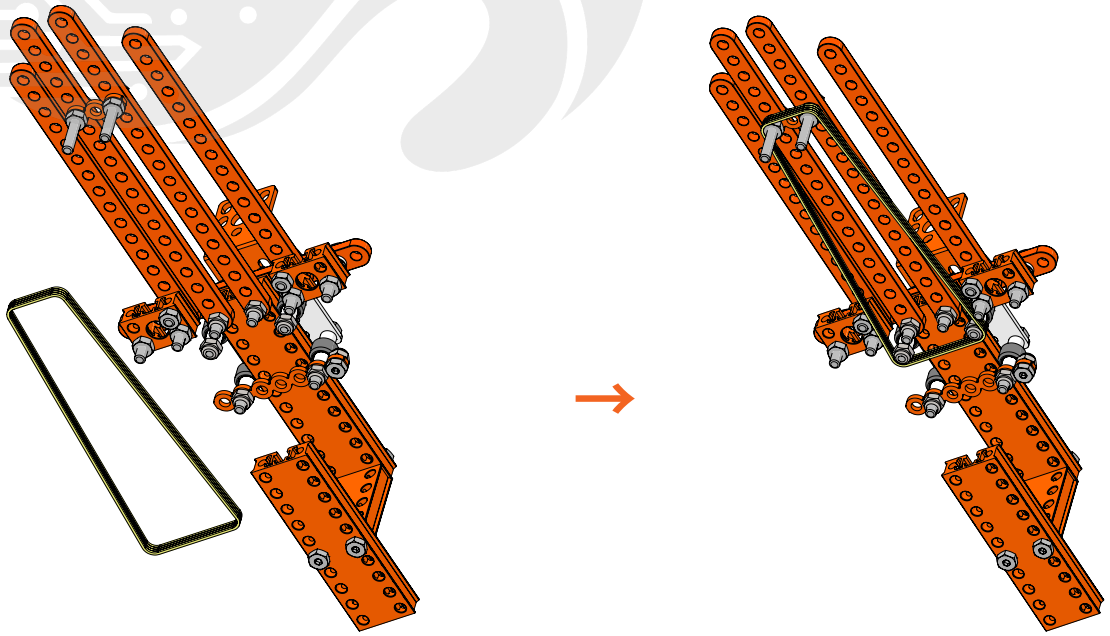

Tips: Rubber bands numbers could be adjusted subject to actual situation.

「 Ball Launcher Robot 」

▶ 24：Assemble Slide Beam 0824-32

2xSlide Beam 0824-32

2xScrew M4*14

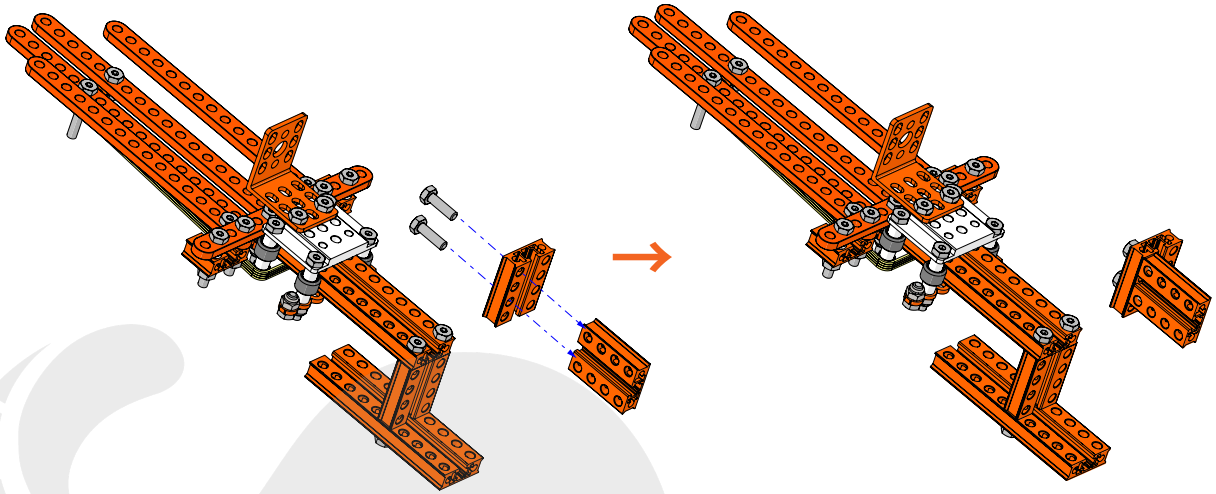

▶ 25：Fix Slide Beam 0824-32

2xScrew M4*14

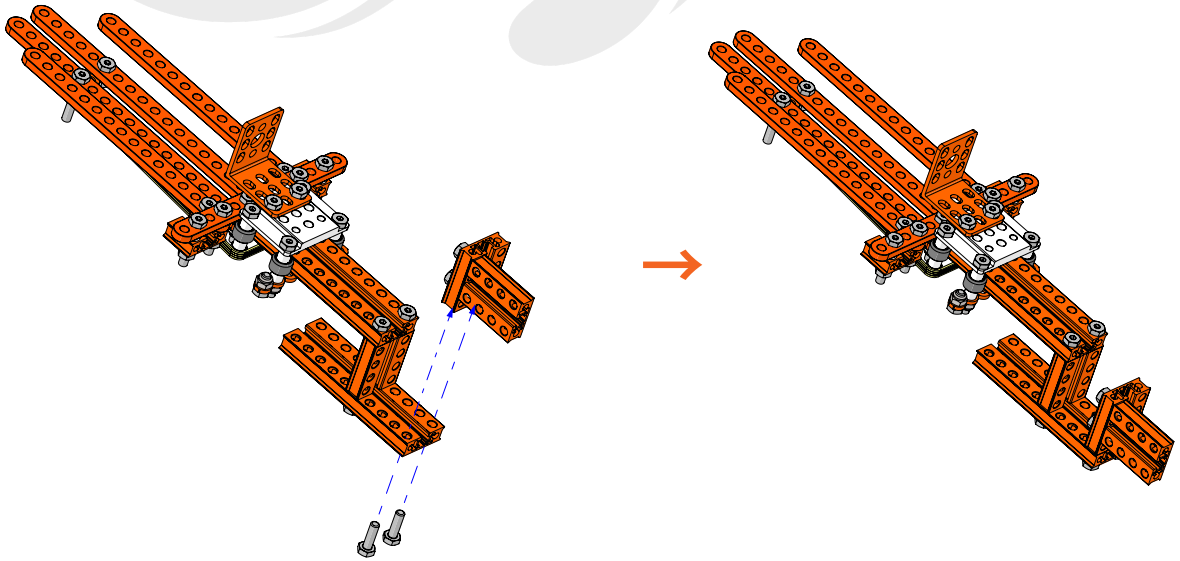

「Ball Launcher Robot」

▶ 26：Assembly Launch Structure to the Moving Platform

2xScrew M4*10

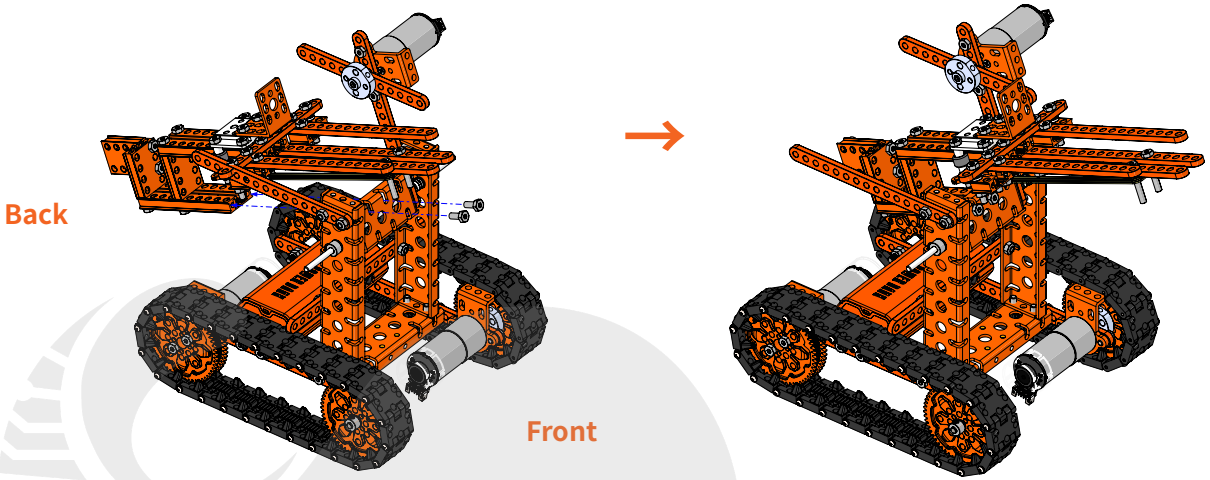

▶ 27：Assemble MG995 Servo

1xMG995 Servo

1x56T-Plastic Gear

1xMG995 Servo Aluminum Alloy Hole Arm

1x Cross Head Screws M3*5

1xMG995 Bracket

4xScrew M4*6

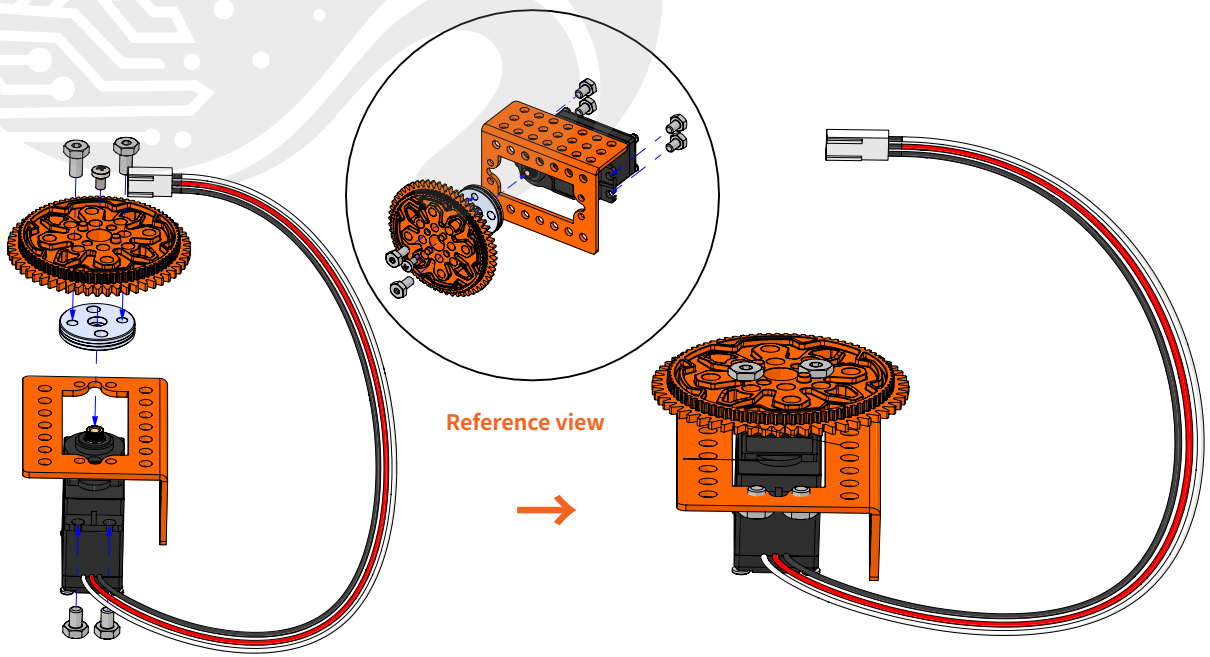

Tips:Please pay attention to the hole position and direction.

「 Ball Launcher Robot 」

▶ 27：Assemble MG995 Servo

- 2xScrew M4*10
- 2xNut M4

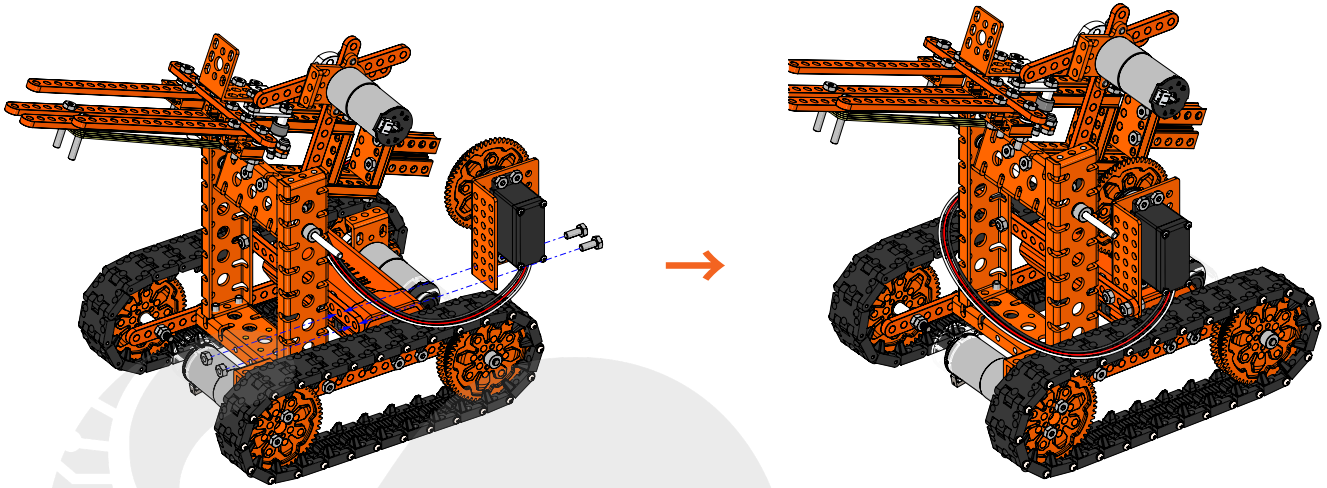

▶ 28：Assemble Beam 0410-106

- 1x Beam 0410-106
- 1x Screw M4*35
- 1x Screw M4*25
- 2xNylon Lock Nut M4
- 2xNylon Spacer 4*7*2
- 1xNylon Spacer 4*7*3
- 1xNylon Spacer 4*7*10

Tips:Be careful not to tighten the screws too much, the gear needs to be able to rotate.

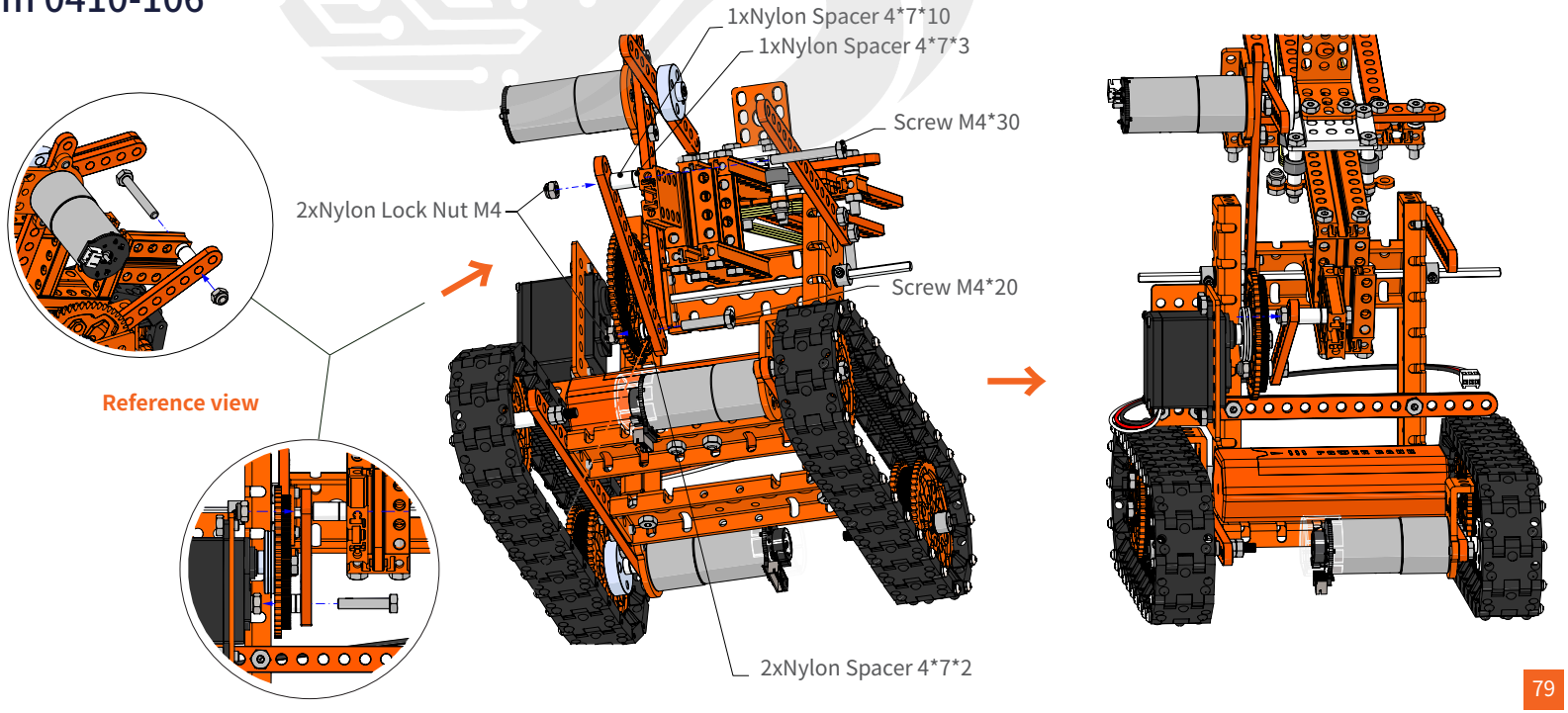

「Ball Launcher Robot」

▶ 29：Assemble RJ11 Adapter V1.0 Module


1x RJ11 Adapter V1.0 Module


2x Screw M4*8


2xNut M4

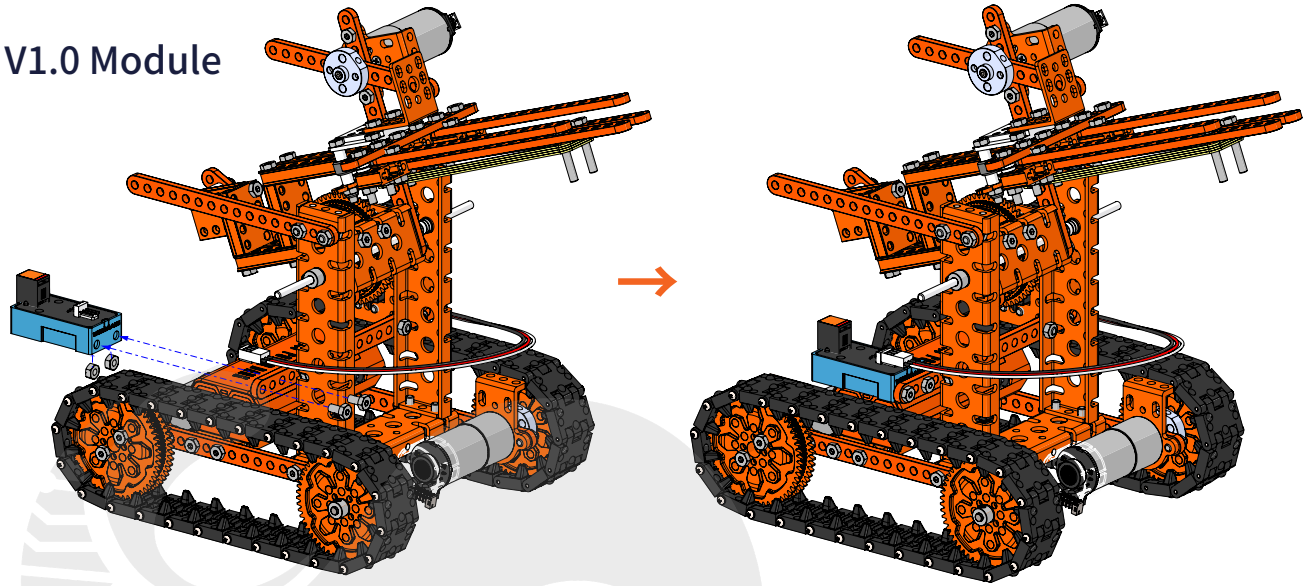

▶ 30：31.Assemble the Mainboard ELF


1xELF Mainboard Assembly


2xScrew M4*8

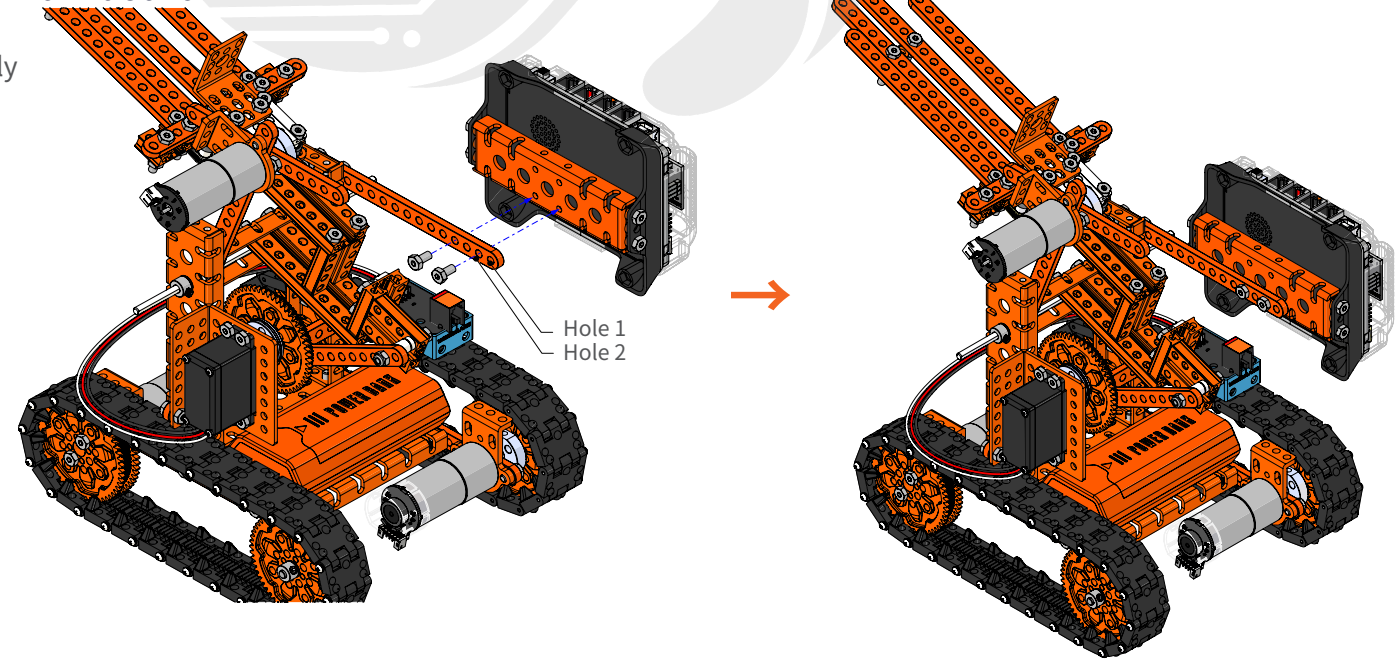

「Ball Launcher Robot」

▶ 31：Wiring

1x Power cord 5.5-2.1

1x DC Motor Wire-35cm

1xRJ11 Cable-20cm

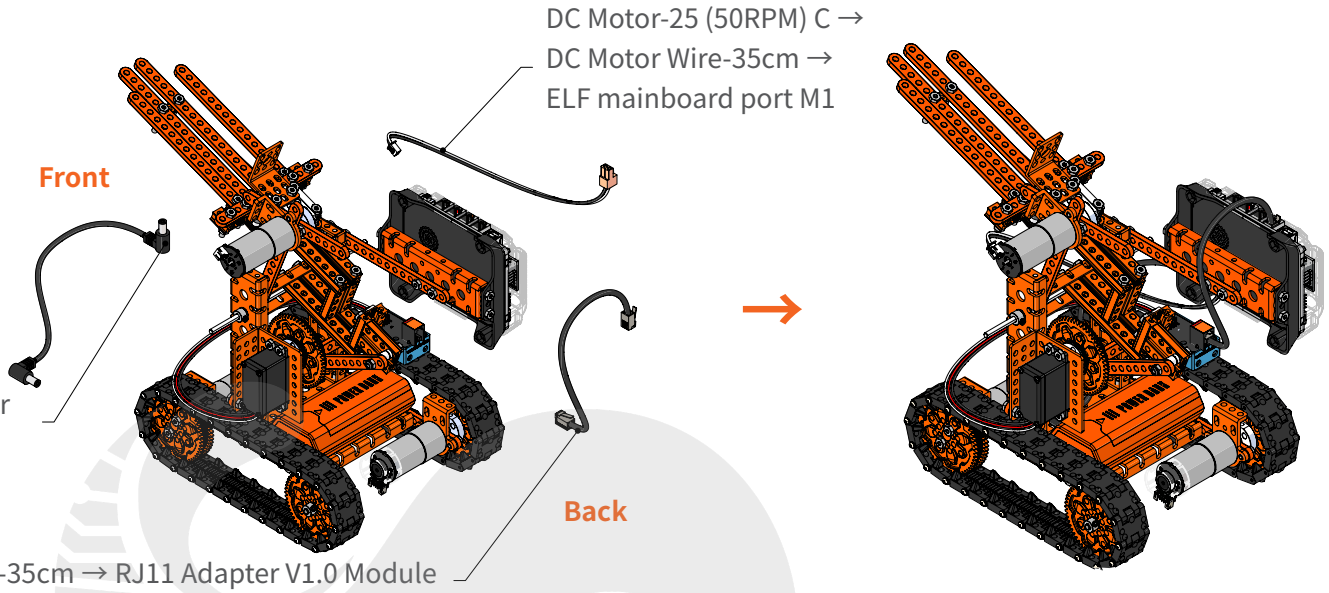

▶ 31：Wiring

2x Encoder Motor Wire-25cm

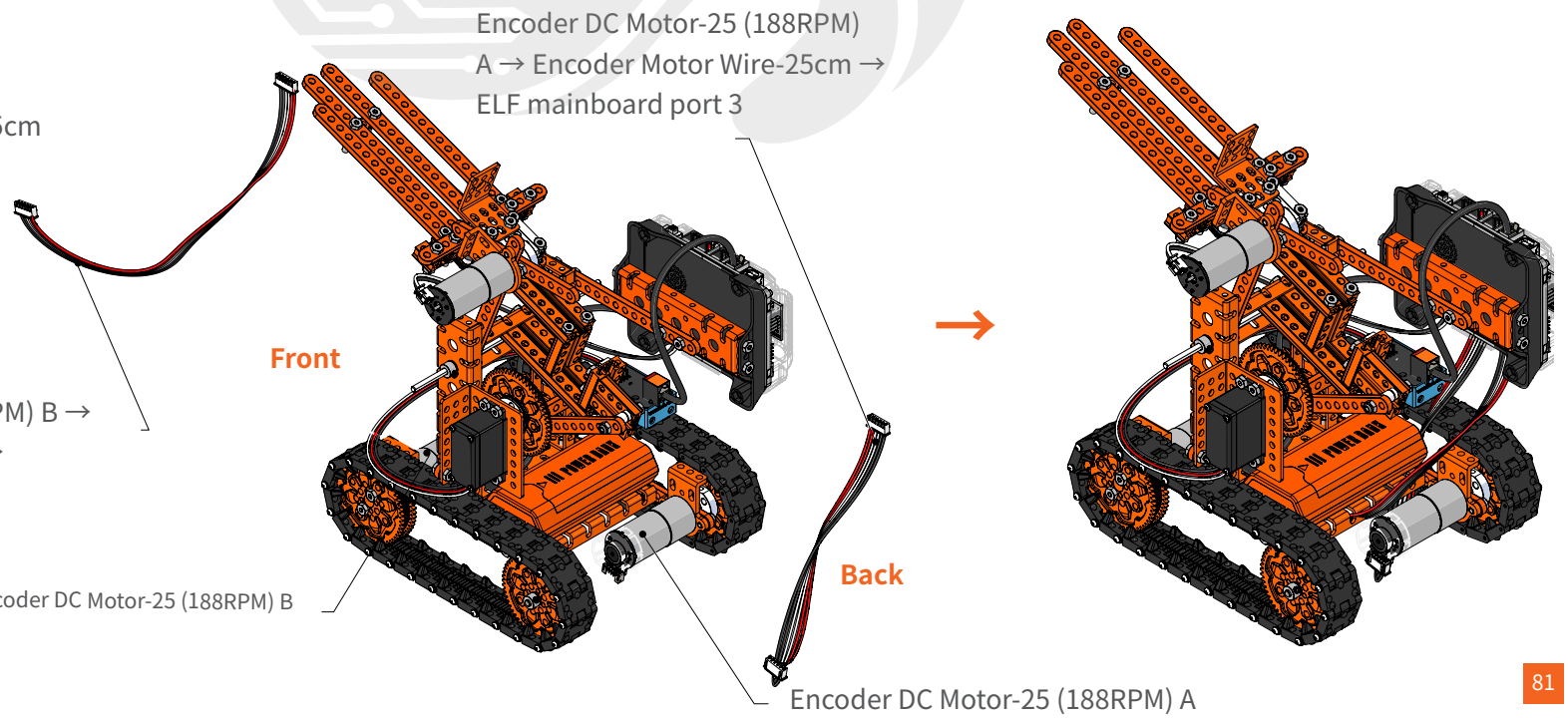

「Wiring」

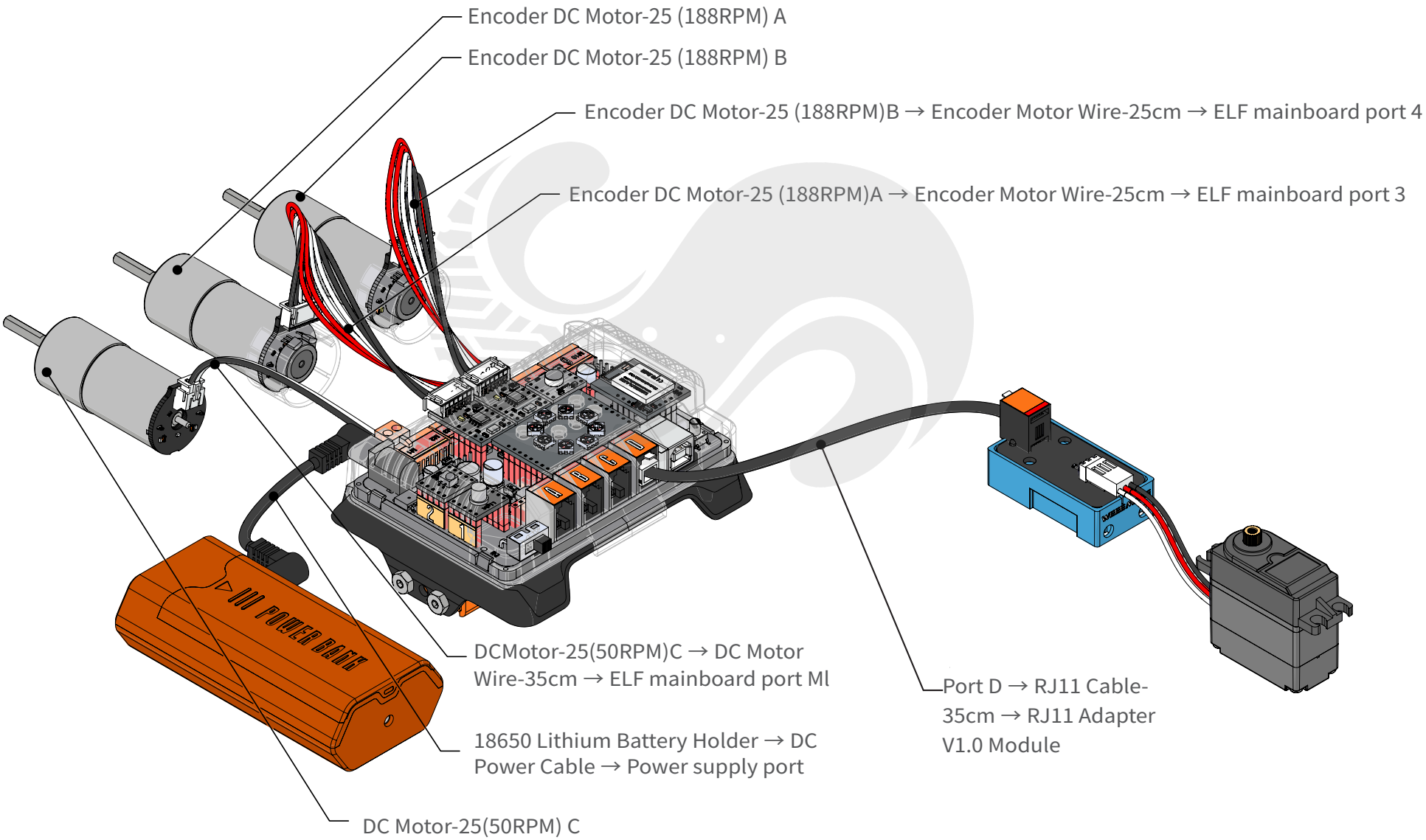
Encoder DC Motor-25 (188RPM) A
Encoder DC Motor-25 (188RPM) B
Encoder DC Motor-25 (188RPM)B → Encoder Motor Wire-25cm → ELF mainboard port 4
Encoder DC Motor-25 (188RPM)A → Encoder Motor Wire-25cm → ELF mainboard port 3
DCMotor-25(50RPM)C → DC Motor Wire-35cm → ELF mainboard port Ml
18650 Lithium Battery Holder → DC Power Cable → Power supply port
DC Motor-25(50RPM) C
Port D → RJ11 Cable-35cm → RJ11 Adapter V1.0 Module
POWER BANK

「Completion Diagram」